eLOQC[a]

Produced with pdflatex and xfig

I Linear optics.

II Postselected computation.

III Near-deterministic computation.

IV Efficient computation: Failure model and codes.

V Efficient computation: Operations and thresholds.

VI Robust computation: Correcting loss.

[a] Efficient Linear Optics Quantum Computation

E. “Manny” Knill: knill@lanl.gov, http://www.c3.lanl.gov/~knill

Optics for Quantum Information?

- Advantages:
  - Mostly room temperature.
  - Easy to observe interference.
  - (Coherence time/ operation time) seems long.
  - Lots of photons.

Optics for Quantum Information?

- Advantages:
  - Mostly room temperature.
  - Easy to observe interference.
  - (Coherence time/ operation time) seems long.
  - Lots of photons.
- Obstacles:
  - Need for nonlinear interactions?
  - Inefficient photodetectors.
  - Inefficient 1-photon sources.
  - Scalable mode matching.

Optics for Quantum Information?

- Advantages:
  - Mostly room temperature.
  - Easy to observe interference.
  - (Coherence time/ operation time) seems long.
  - Lots of photons.
- Obstacles:
  - Need for nonlinear interactions?
  - Inefficient photodetectors.
  - Inefficient 1-photon sources.
  - Scalable mode matching.
- Optical quantum computation so far:
  - Single photon qubits, Kerr non-linearities. Milburn 1988 [1]
  - Optics and cavity QED. Turchette&*al*. 1995 [2]
  - Linear optics, many modes. Cerf&Adami&Kwiat 1998 [3]

Optics for Quantum Information?

- Advantages:
  - Mostly room temperature.
  - Easy to observe interference.
  - (Coherence time/ operation time) seems long.
  - Lots of photons.
- Obstacles:
  - Need for nonlinear interactions?
  - Inefficient photodetectors.
  - Inefficient 1-photon sources.
  - Scalable mode matching.
- Optical quantum computation so far:
  - Single photon qubits, Kerr non-linearities. Milburn 1988 [1]
  - Optics and cavity QED. Turchette&*al*. 1995 [2]
  - Linear optics, many modes. Cerf&Adami&Kwiat 1998 [3]
- Problem: Capability of linear optics, 1-photon sources and photodetectors?

Optics for Quantum Information?

- Advantages:
  - Mostly room temperature.
  - Easy to observe interference.
  - (Coherence time/ operation time) seems long.
  - Lots of photons.
- Obstacles:
  - Need for nonlinear interactions?
  - Inefficient photodetectors.
  - Inefficient 1-photon sources.
  - Scalable mode matching.
- Optical quantum computation so far:
  - Single photon qubits, Kerr non-linearities. Milburn 1988 [1]
  - Optics and cavity QED. Turchette&*al*. 1995 [2]
  - Linear optics, many modes. Cerf&Adami&Kwiat 1998 [3]
- Problem: Capability of linear optics, 1-photon sources and photodetectors?
  - eLOQC. Knill&Laflamme&Milburn 2000 [4]
  - Linear optics with continuous variable encoding. Gottesman&Kitaev&Preskill 2000 [5]

eLOQC Guide

Optical methods

Capabilities realized

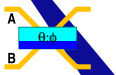

Optical systems & ops: Qubits and one-qubit ops

No-Go?

eLOQC Guide

Optical methods	Capabilities realized
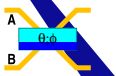 Optical systems & ops:	Qubits and one-qubit ops
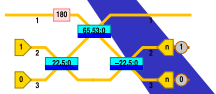 Postselection:	QC, if lucky

No-Go?

eLOQC Guide

Optical methods	Capabilities realized
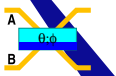 Optical systems & ops:	Qubits and one-qubit ops
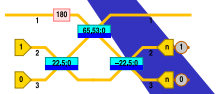 Postselection:	QC, if lucky
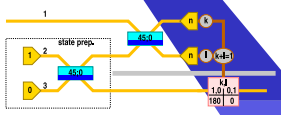 Teleportation:	Standard QC

No-Go?

eLOQC Guide

Optical methods	Capabilities realized
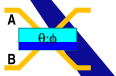 Optical systems & ops:	Qubits and one-qubit ops
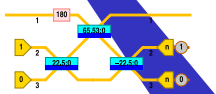 Postselection:	QC, if lucky
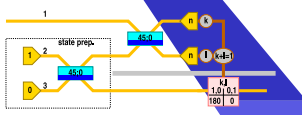 Teleportation:	Standard QC
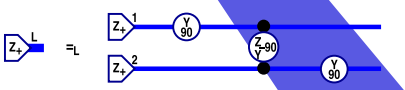 Z-encoding:	Efficient QC

No-Go?

eLOQC Guide

Optical methods	Capabilities realized
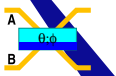 Optical systems & ops:	Qubits and one-qubit ops
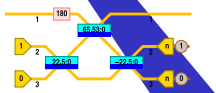 Postselection:	QC, if lucky
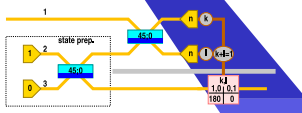 Teleportation:	Standard QC
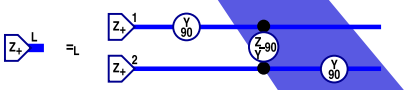 Z-encoding:	Efficient QC
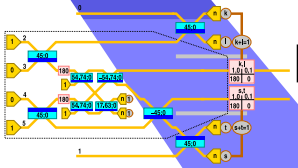 Loss detection, Erasure codes:	Robuster QC

No-Go?

eLOQC Guide

Optical methods	Capabilities realized
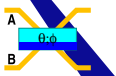 Optical systems & ops:	Qubits and one-qubit ops
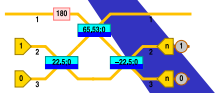 Postselection:	QC, if lucky
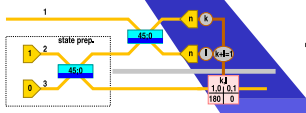 Teleportation:	Standard QC
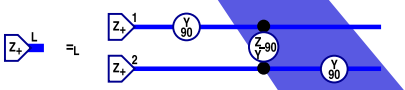 Z-encoding:	Efficient QC
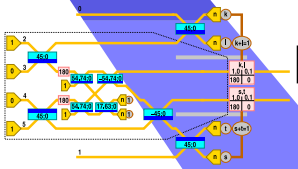 Loss detection, Erasure codes:	Robuster QC
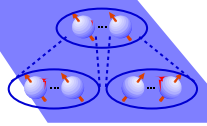 Accuracy threshold:	Scalable QC

No-Go?

eLOQC Guide

Optical methods	Capabilities realized
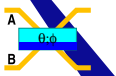 Optical systems & ops:	Qubits and one-qubit ops
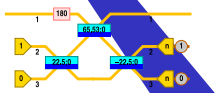 Postselection:	QC, if lucky
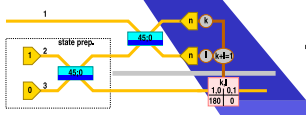 Teleportation:	Standard QC
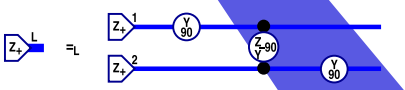 Z-encoding:	Efficient QC
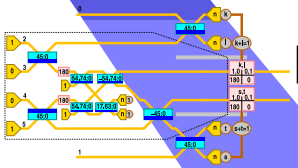 Loss detection, Erasure codes:	Robuster QC
Implementation issues:	
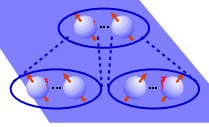 Accuracy threshold:	Scalable QC

- Resource requirements
- Technological challenges

No-Go?

Optical Modes

- State space of mode A:

$$|0\rangle_{\mathsf{A}}, |1\rangle_{\mathsf{A}}, \ldots, |n\rangle_{\mathsf{A}}, \ldots$$

Optical Modes

- State space of mode A:

$$|0\rangle_{\mathsf{A}}, |1\rangle_{\mathsf{A}}, \ldots, |n\rangle_{\mathsf{A}}, \ldots$$

- Operators of mode A:

$$\begin{aligned} \left(\mathbf{a}^\dagger\right)_{\mathsf{A}} : \quad |n\rangle_{\mathsf{A}} &\rightarrow \sqrt{n+1}\,|n+1\rangle_{\mathsf{A}} \\ \left(\mathbf{n}\right)_{\mathsf{A}} : \quad |n\rangle_{\mathsf{A}} &\rightarrow n\,|n\rangle_{\mathsf{A}} \end{aligned}$$

Optical Modes

- State space of mode A:

$$|0\rangle_{\mathsf{A}}, |1\rangle_{\mathsf{A}}, \ldots, |n\rangle_{\mathsf{A}}, \ldots$$

- Operators of mode A:

$$\begin{aligned} \left(\mathbf{a}^\dagger\right)_{\mathsf{A}} : \quad |n\rangle_{\mathsf{A}} &\rightarrow \sqrt{n+1}\,|n+1\rangle_{\mathsf{A}} \\ \left(\mathbf{n}\right)_{\mathsf{A}} : \quad |n\rangle_{\mathsf{A}} &\rightarrow n\,|n\rangle_{\mathsf{A}} \end{aligned}$$

- Bosonic qubit $\mathsf{Q}(\mathsf{A},\mathsf{B})$:

$$\begin{aligned} |\mathfrak{o}\rangle_{\mathsf{Q}(\mathsf{A},\mathsf{B})} &\leftrightarrow |0\rangle_{\mathsf{A}}|1\rangle_{\mathsf{B}} \\ |\mathfrak{1}\rangle_{\mathsf{Q}(\mathsf{A},\mathsf{B})} &\leftrightarrow |1\rangle_{\mathsf{A}}|0\rangle_{\mathsf{B}} \end{aligned}$$

Optical Modes

- State space of mode A:

$$|0\rangle_{\mathsf{A}}, |1\rangle_{\mathsf{A}}, \ldots, |n\rangle_{\mathsf{A}}, \ldots$$

- Operators of mode A:

$$\begin{aligned} \left(\mathbf{a}^\dagger\right)_{\mathsf{A}} &: \quad |n\rangle_{\mathsf{A}} \quad \rightarrow \quad \sqrt{n+1}\,|n+1\rangle_{\mathsf{A}} \\ \left(\mathbf{n}\right)_{\mathsf{A}} &: \quad |n\rangle_{\mathsf{A}} \quad \rightarrow \quad n\,|n\rangle_{\mathsf{A}} \end{aligned}$$

- Bosonic qubit $\mathsf{Q}(\mathsf{A},\mathsf{B})$:

$$\begin{aligned} |\mathfrak{o}\rangle_{\mathsf{Q}(\mathsf{A},\mathsf{B})} &\leftrightarrow |0\rangle_{\mathsf{A}}|1\rangle_{\mathsf{B}} \\ |\mathfrak{1}\rangle_{\mathsf{Q}(\mathsf{A},\mathsf{B})} &\leftrightarrow |1\rangle_{\mathsf{A}}|0\rangle_{\mathsf{B}} \end{aligned}$$

Optical network notation for $\mathsf{Q}(\mathsf{A},\mathsf{B})$:

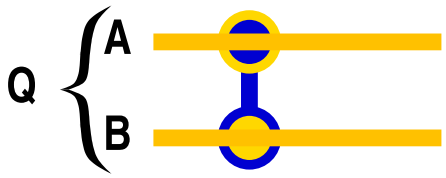

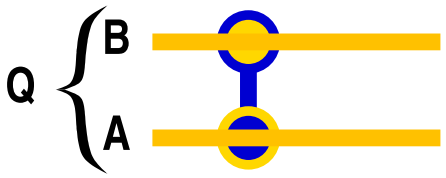

Optical Devices for LOQC

- Mode preparations:

$|0\rangle$ 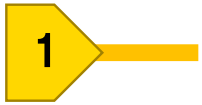

$|1\rangle$

Optical Devices for LOQC

- Mode preparations:

$|0\rangle$ 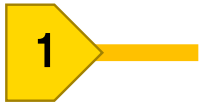

$|1\rangle$

- Photon counter: $|k\rangle$ 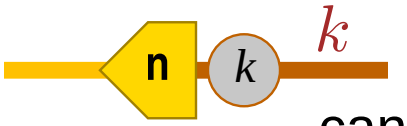

. . . can be used for feedback.

Optical Devices for LOQC

- Mode preparations:

$|0\rangle$ 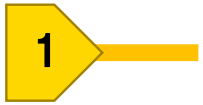

$|1\rangle$

- Photon counter: $|k\rangle$ 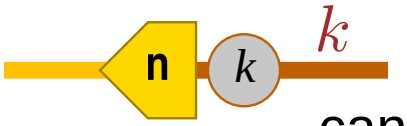

. . . can be used for feedback.

- Phase shifter $\mathbf{P}_\theta$: $|k\rangle$ 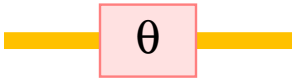

$e^{i\theta k}|k\rangle$

$e^{i\theta \mathbf{n}}$

Optical Devices for LOQC

- Mode preparations:

$|0\rangle$ 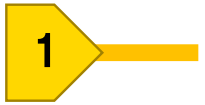

$|1\rangle$

- Photon counter: $|k\rangle$ 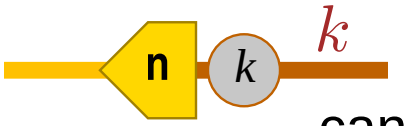

. . . can be used for feedback.

- Phase shifter $\mathbf{P}_\theta$: $|k\rangle$ 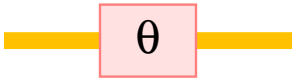

$e^{i\theta k}|k\rangle$

$e^{i\theta \mathbf{n}}$

. . . the simplest linear optics element.

Optical Devices for LOQC

- Mode preparations:

$|0\rangle$ 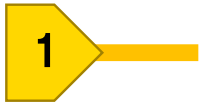

$|1\rangle$

- Photon counter: $|k\rangle$ 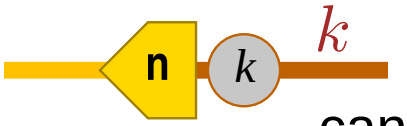

. . . can be used for feedback.

- Phase shifter $\mathbf{P}_\theta$: $|k\rangle$ 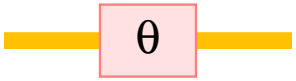

$e^{i\theta k}|k\rangle$

$e^{i\theta \mathbf{n}}$

. . . the simplest linear optics element.

- Beam splitter $\mathbf{B}_{\theta,\phi}$: 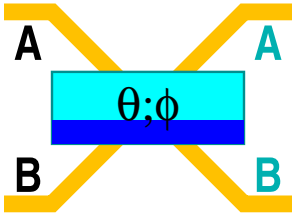

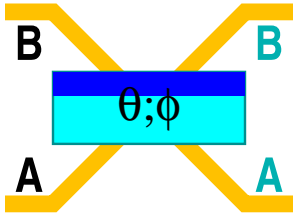

Optical Devices for LOQC

- Mode preparations:

$|0\rangle$ 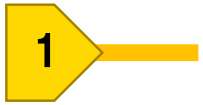

$|1\rangle$

- Photon counter: $|k\rangle$ 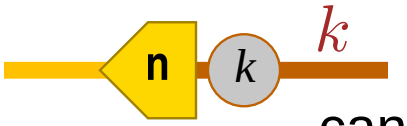

. . . can be used for feedback.

- Phase shifter $\mathbf{P}_\theta$: $|k\rangle$ 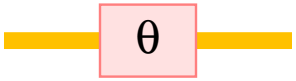

$e^{i\theta k}|k\rangle$

$e^{i\theta \mathbf{n}}$

. . . the simplest linear optics element.

- Beam splitter $\mathbf{B}_{\theta,\phi}$: 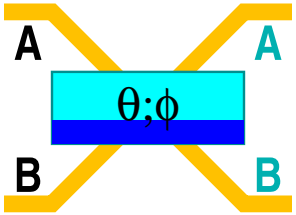

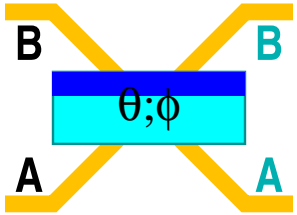

$$|1\rangle_A|0\rangle_B \rightarrow \cos(\theta)|1\rangle_A|0\rangle_B + e^{-i\phi}\sin(\theta)|0\rangle_A|1\rangle_B$$

$$|0\rangle_A|1\rangle_B \rightarrow -e^{i\phi}\sin(\theta)|1\rangle_A|0\rangle_B + \cos(\theta)|0\rangle_A|1\rangle_B$$

. . . another linear optics element.

On Linear Optics

- U is *passive linear* if $U\mathbf{a}^\dagger_{\mathsf{s}}U^\dagger = \sum_r u_{rs}\mathbf{a}^\dagger_{\mathsf{r}}$.

On Linear Optics

- U is *passive linear* if $U\mathbf{a}^\dagger_{\mathsf{s}}U^\dagger = \sum_r u_{rs}\mathbf{a}^\dagger_{\mathsf{r}}$.

  Def: $\hat{u} = \hat{u}(U)$ is the matrix with entries u_{rs}.

  - U preserves particle number.
  - $\hat{u}$ is unitary, the "second quantization" form of U.

On Linear Optics

- U is *passive linear* if $U\mathbf{a}^\dagger_s U^\dagger = \sum_r u_{rs}\mathbf{a}^\dagger_r$.

  Def: $\hat{u} = \hat{u}(U)$ is the matrix with entries u_{rs}.

  - U preserves particle number.
  - $\hat{u}$ is unitary, the "second quantization" form of U.

- Example: $\hat{u}(\mathbf{B}_{45^\circ}) = \frac{1}{\sqrt{2}}\begin{pmatrix} 1 & -1 \\ 1 & 1 \end{pmatrix}$.

  Def: $\mathbf{B}_{45^\circ} = \mathbf{B}_{45^\circ,0}$.

On Linear Optics

- U is *passive linear* if $U\mathbf{a}^\dagger_s U^\dagger = \sum_r u_{rs}\mathbf{a}^\dagger_r$.

  Def: $\hat{u} = \hat{u}(U)$ is the matrix with entries u_{rs}.
  - U preserves particle number.
  - $\hat{u}$ is unitary, the "second quantization" form of U.

- Example: $\hat{u}(\mathbf{B}_{45^\circ}) = \frac{1}{\sqrt{2}}\begin{pmatrix} 1 & -1 \\ 1 & 1 \end{pmatrix}$. Def: $\mathbf{B}_{45^\circ} = \mathbf{B}_{45^\circ,0}$.

- **Theorem 1:** For every unitary $\hat{u}$, the corresponding U is implementable by a network of beam splitters and phase shifters.

  Reck&Zeilinger&Bernstein 1994 [6].

On Linear Optics

- U is *passive linear* if $U\mathbf{a}^\dagger_s U^\dagger = \sum_r u_{rs}\mathbf{a}^\dagger_r$.

  Def: $\hat{u} = \hat{u}(U)$ is the matrix with entries u_{rs}.
  - U preserves particle number.
  - $\hat{u}$ is unitary, the "second quantization" form of U.

- Example: $\hat{u}(\mathbf{B}_{45^\circ}) = \frac{1}{\sqrt{2}}\begin{pmatrix} 1 & -1 \\ 1 & 1 \end{pmatrix}$. Def: $\mathbf{B}_{45^\circ} = \mathbf{B}_{45^\circ,0}$.

- **Theorem 1:** For every unitary $\hat{u}$, the corresponding U is implementable by a network of beam splitters and phase shifters.

  Reck&Zeilinger&Bernstein 1994 [6].

- U is *linear* if $U\mathbf{a}^\dagger_s U^\dagger = \sum_r \left(a_{rs}\mathbf{a}^\dagger_r + b_{rs}\mathbf{a}_r\right) + c_s$

On Linear Optics

- U is *passive linear* if $U\mathbf{a}^\dagger{}_s U^\dagger = \sum_r u_{rs}\mathbf{a}^\dagger{}_r$.

  Def: $\hat{u} = \hat{u}(U)$ is the matrix with entries u_{rs}.
  - U preserves particle number.
  - $\hat{u}$ is unitary, the "second quantization" form of U.

- Example: $\hat{u}(\mathbf{B}_{45^\circ}) = \frac{1}{\sqrt{2}}\begin{pmatrix} 1 & -1 \\ 1 & 1 \end{pmatrix}$. Def: $\mathbf{B}_{45^\circ} = \mathbf{B}_{45^\circ,0}$.

- **Theorem 1:** For every unitary $\hat{u}$, the corresponding U is implementable by a network of beam splitters and phase shifters. Reck&Zeilinger&Bernstein 1994 [6].

- U is *linear* if $U\mathbf{a}^\dagger{}_s U^\dagger = \sum_r \left(a_{rs}\mathbf{a}^\dagger{}_r + b_{rs}\mathbf{a}_r\right) + c_s$

- Active linear $+$

Hong&Mandel 1986 [7]

Linear Optics No-Go?

- Passive linear optics $\simeq$ classical wave mechanics?

Linear Optics No-Go?

- Passive linear optics $\simeq$ classical wave mechanics?
- **Theorem 2:** Linear optics and particle detectors for fermions are efficiently classically simulatable.

Valiant 2001 [8], Terhal&DiVincenzo 2001 [9], Knill 2001 [10]

Linear Optics No-Go?

- Passive linear optics $\simeq$ classical wave mechanics?
- **Theorem 2:** Linear optics and particle detectors for fermions are efficiently classically simulatable.

  Valiant 2001 [8], Terhal&DiVincenzo 2001 [9], Knill 2001 [10]

- **Theorem 3:** Linear optics and measurement of $\hat{x} \propto \mathbf{a}^\dagger + \mathbf{a}$ is efficiently classically simulatable. Bartlett&*al.* 2001 [11]

Linear Optics No-Go?

- Passive linear optics $\simeq$ classical wave mechanics?
- **Theorem 2:** Linear optics and particle detectors for fermions are efficiently classically simulatable.

  Valiant 2001 [8], Terhal&DiVincenzo 2001 [9], Knill 2001 [10]
- **Theorem 3:** Linear optics and measurement of $\hat{x} \propto \mathbf{a}^\dagger + \mathbf{a}$ is efficiently classically simulatable. Bartlett&*al.* 2001 [11]

Discussion

- **Conjecture 4:** Number state preparations, linear optics and measurement of exactly one mode (no feedback) are efficiently classically simulatable.

Linear Optics No-Go?

- Passive linear optics $\simeq$ classical wave mechanics?
- **Theorem 2:** Linear optics and particle detectors for fermions are efficiently classically simulatable.

  Valiant 2001 [8], Terhal&DiVincenzo 2001 [9], Knill 2001 [10]
- **Theorem 3:** Linear optics and measurement of $\hat{x} \propto \mathbf{a}^\dagger + \mathbf{a}$ is efficiently classically simulatable. Bartlett&*al.* 2001 [11]

Discussion

- **Conjecture 4:** Number state preparations, linear optics and measurement of exactly one mode (no feedback) are efficiently classically simulatable.
- **Observation 5:** Coherent state preparations, passive linear optics and photodectors with feedback are efficiently classically simulatable.

  See also: Lütkenhaus&Calsamiglia&Suominen 1999 [12], Calsamiglia 2001 [13]

Bosonic Qubit Operations

- Preparation of $|0\rangle_{Q(A,B)}$:

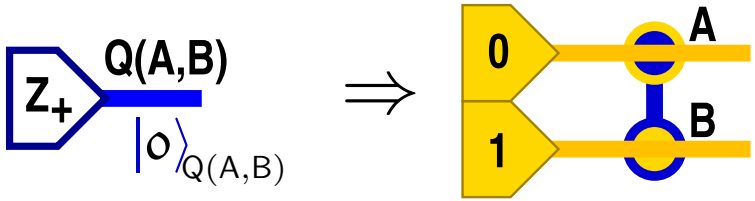

Bosonic Qubit Operations

- Preparation of $|0\rangle_{Q(A,B)}$:

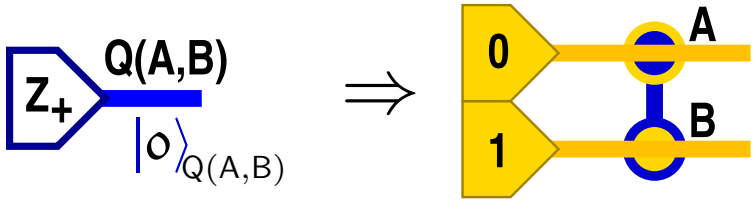

- Measurement of $(\sigma_z)_{Q(A,B)}$:

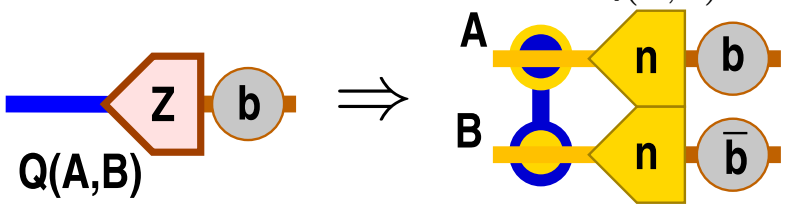

Bosonic Qubit Operations

- Preparation of $|0\rangle_{Q(A,B)}$:

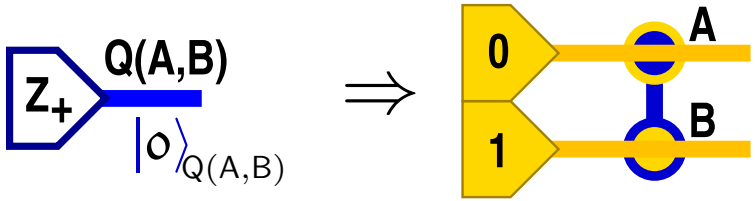

- Measurement of $(\sigma_z)_{Q(A,B)}$:

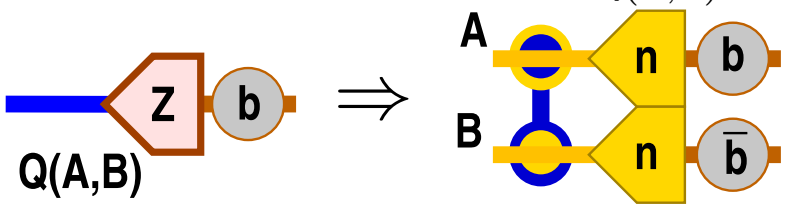

- Z $= \sigma_z$ rotation by θ, $e^{-i\sigma_z\theta/2}$:

$$\propto \begin{pmatrix} 1 & 0 \\ 0 & e^{i\theta} \end{pmatrix} :$$

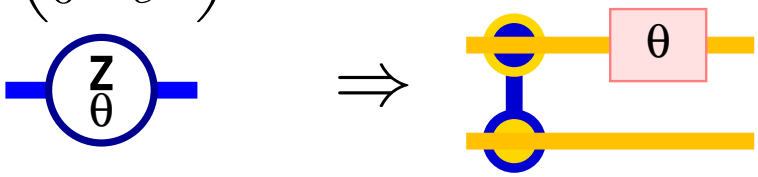

Bosonic Qubit Operations

- Preparation of $|0\rangle_{Q(A,B)}$:

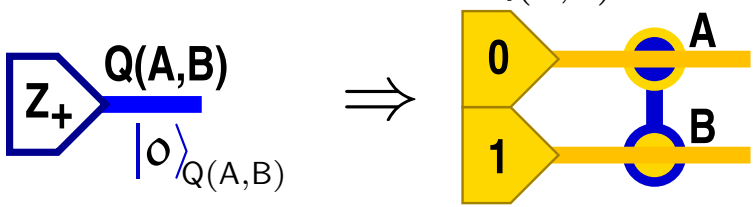

- Measurement of $(\sigma_z)_{Q(A,B)}$:

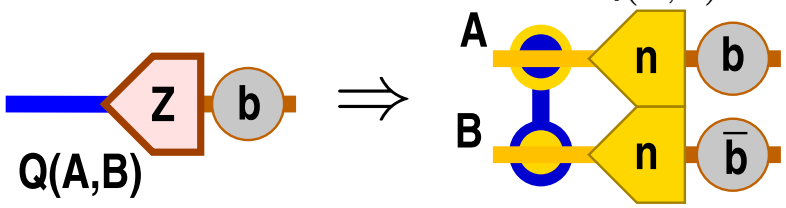

- Z $= \sigma_z$ rotation by θ, $e^{-i\sigma_z\theta/2}$:

$$\propto \begin{pmatrix} 1 & 0 \\ 0 & e^{i\theta} \end{pmatrix} :$$

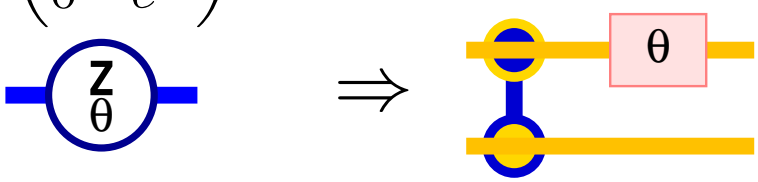

- X $= \sigma_x$ rotation by ϕ, $e^{-i\sigma_x\phi/2}$:

$$\begin{pmatrix} \cos(\phi) & -i\sin(\phi) \\ -i\sin(\phi) & \cos(\phi) \end{pmatrix} :$$

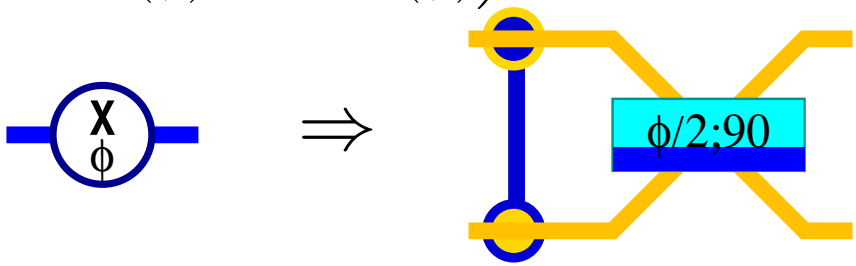

Bosonic Qubit Operations

- Preparation of $|0\rangle_{Q(A,B)}$:

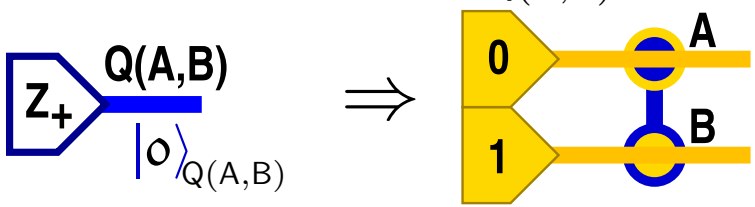

- Measurement of $(\sigma_z)_{Q(A,B)}$:

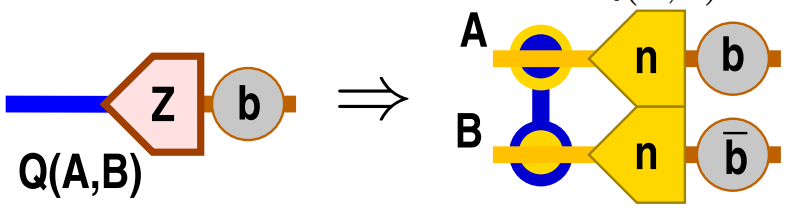

- Z $= \sigma_z$ rotation by θ, $e^{-i\sigma_z\theta/2}$:

$$\propto \begin{pmatrix} 1 & 0 \\ 0 & e^{i\theta} \end{pmatrix}:$$

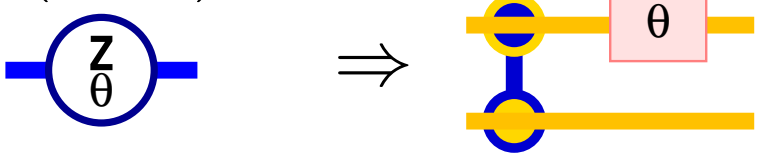

- X $= \sigma_x$ rotation by ϕ, $e^{-i\sigma_x\phi/2}$:

$$\begin{pmatrix} \cos(\phi) & -i\sin(\phi) \\ -i\sin(\phi) & \cos(\phi) \end{pmatrix}:$$

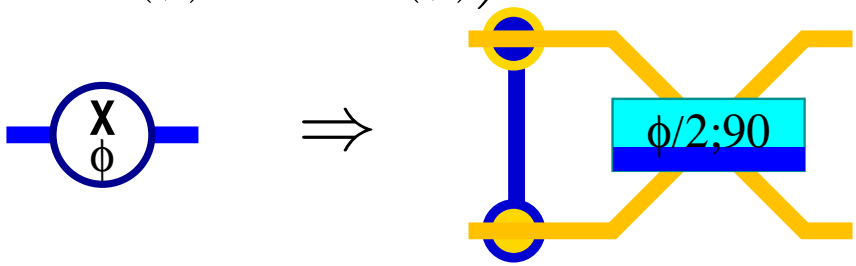

- Y $= \sigma_y$ rotation by ϕ, $e^{-i\sigma_y\phi/2}$:

$$\begin{pmatrix} \cos(\phi) & \sin(\phi) \\ -\sin(\phi) & \cos(\phi) \end{pmatrix}:$$

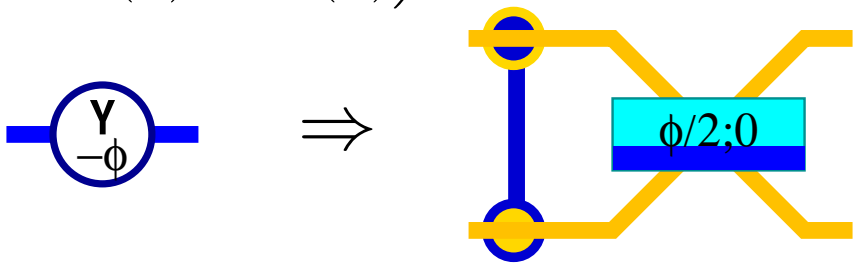

Bosonic Qubit Operations

- Preparation of $|0\rangle_{Q(A,B)}$:

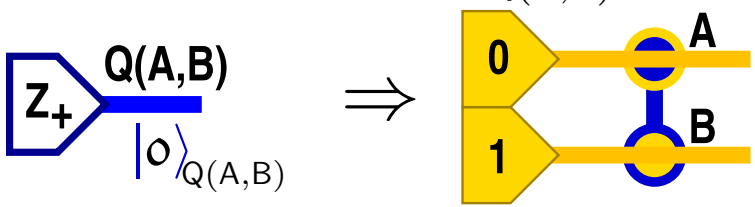

- Measurement of $(\sigma_z)_{Q(A,B)}$:

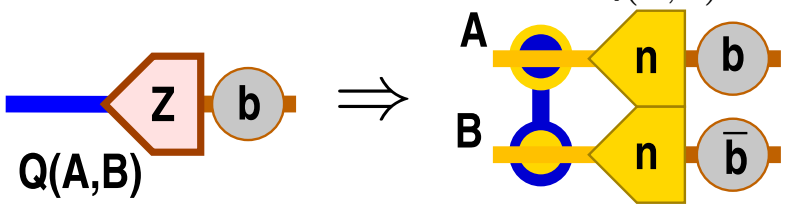

- Z $= \sigma_z$ rotation by θ, $e^{-i\sigma_z\theta/2}$:

$$\propto \begin{pmatrix} 1 & 0 \\ 0 & e^{i\theta} \end{pmatrix}:$$

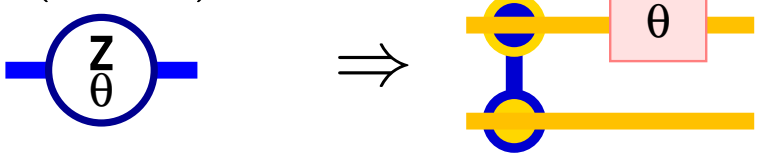

- X $= \sigma_x$ rotation by ϕ, $e^{-i\sigma_x\phi/2}$:

$$\begin{pmatrix} \cos(\phi) & -i\sin(\phi) \\ -i\sin(\phi) & \cos(\phi) \end{pmatrix}:$$

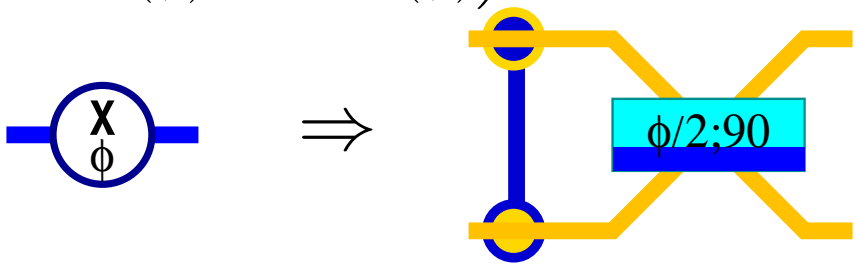

- Y $= \sigma_y$ rotation by ϕ, $e^{-i\sigma_y\phi/2}$:

$$\begin{pmatrix} \cos(\phi) & \sin(\phi) \\ -\sin(\phi) & \cos(\phi) \end{pmatrix}:$$

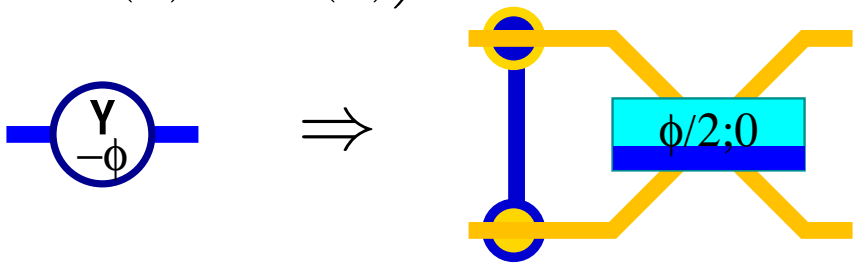

- Still need a “nonlinear” coupling.

Back to: Guide

Postselected Non-linear Phaseshift

- $\mathsf{NS}(\theta) : \alpha|0\rangle + \beta|1\rangle + \gamma|2\rangle \rightarrow \alpha|0\rangle + \beta|1\rangle + e^{-i\theta}\gamma|2\rangle$

See also: Ralph&*al.* 2001 [14], Rudolph&Pan 2001 [15], Pittman&*al.* 2001 [16]

Postselected Non-linear Phaseshift

- NS(θ) : $\alpha|0\rangle + \beta|1\rangle + \gamma|2\rangle \rightarrow \alpha|0\rangle + \beta|1\rangle + e^{-i\theta}\gamma|2\rangle$
- Postselected NS$(180°)$, prob$_{\text{succ}} = 1/4$:

$\alpha|0\rangle + \beta|1\rangle + \gamma|2\rangle$

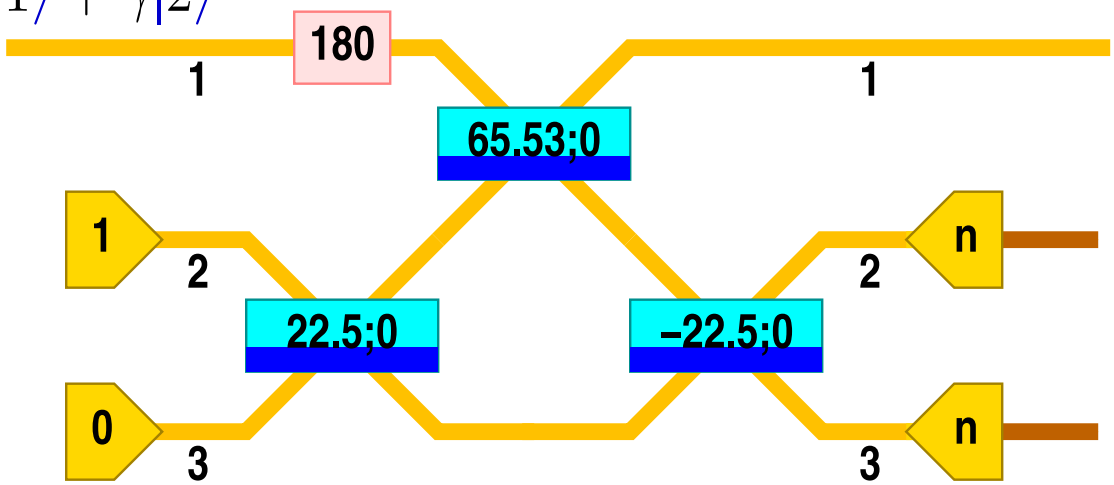

See also: Ralph&*al.* 2001 [14], Rudolph&Pan 2001 [15], Pittman&*al.* 2001 [16]

Postselected Non-linear Phaseshift

- NS(θ) : $\alpha|0\rangle + \beta|1\rangle + \gamma|2\rangle \rightarrow \alpha|0\rangle + \beta|1\rangle + e^{-i\theta}\gamma|2\rangle$
- Postselected NS$(180°)$, prob$_{\text{succ}} = 1/4$:

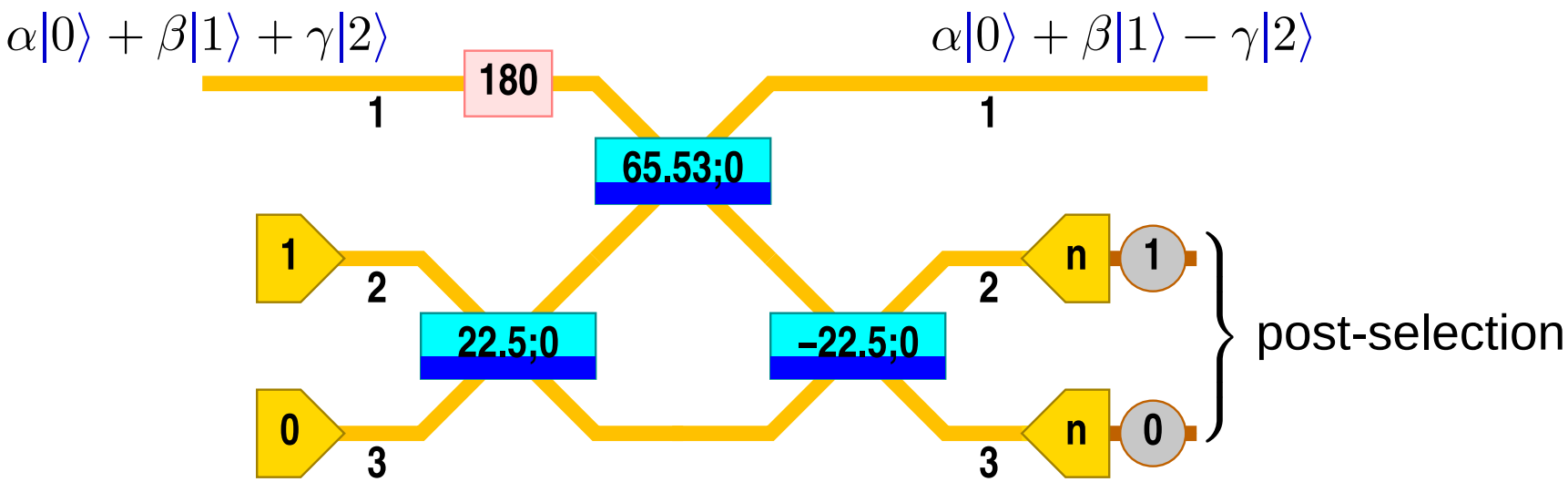

See also: Ralph&*al.* 2001 [14], Rudolph&Pan 2001 [15], Pittman&*al.* 2001 [16]

Postselected Non-linear Phaseshift

- NS(θ) : $\alpha|0\rangle + \beta|1\rangle + \gamma|2\rangle \rightarrow \alpha|0\rangle + \beta|1\rangle + e^{-i\theta}\gamma|2\rangle$
- Postselected NS$(180°)$, prob$_{\text{succ}} = 1/4$:

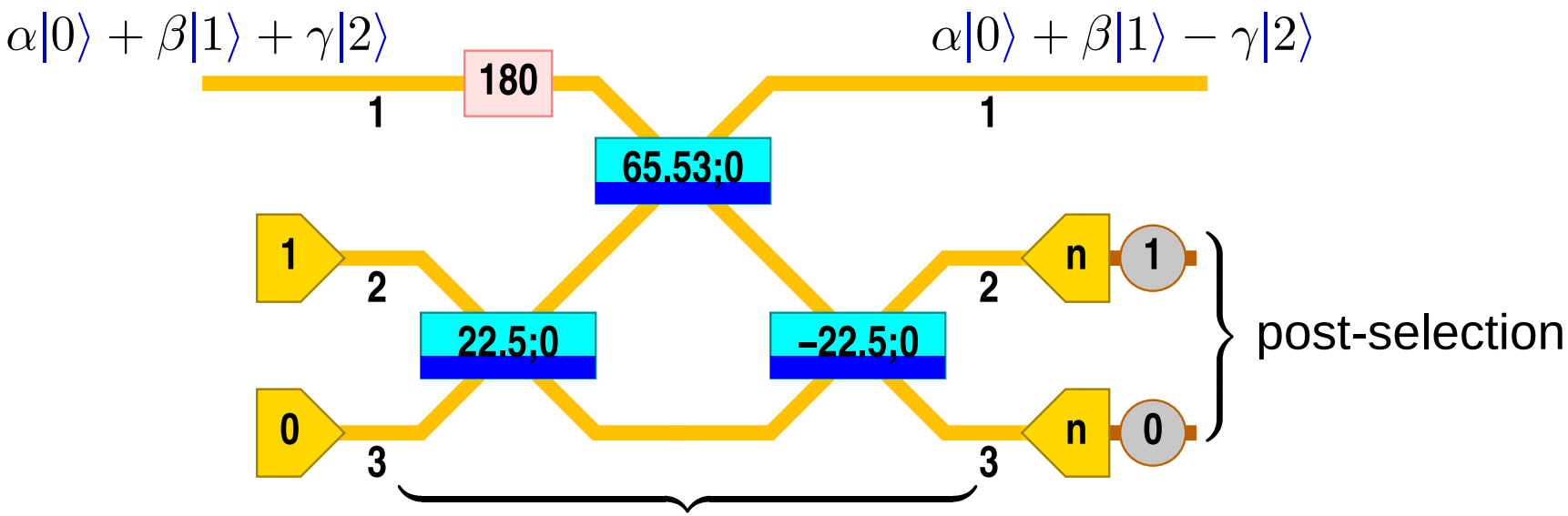

$$\hat{U} = \begin{pmatrix} 1 - 2^{1/2} & 2^{-1/4} & (3/2^{1/2} - 2)^{1/2} \\ 2^{-1/4} & 1/2 & 1/2 - 1/2^{1/2} \\ (3/2^{1/2} - 2)^{1/2} & 1/2 - 1/2^{1/2} & 2^{1/2} - 1/2 \end{pmatrix}.$$

See also: Ralph&*al.* 2001 [14], Rudolph&Pan 2001 [15], Pittman&*al.* 2001 [16]

Postselected Conditional Sign Flip

- qCS(θ) for qubits:

$$\alpha|\mathtt{00}\rangle+\beta|\mathtt{01}\rangle+\gamma|\mathtt{10}\rangle+\delta|\mathtt{11}\rangle \rightarrow \alpha|\mathtt{00}\rangle+\beta|\mathtt{01}\rangle+\gamma|\mathtt{10}\rangle+e^{i\theta}\delta|\mathtt{11}\rangle$$

Postselected Conditional Sign Flip

- qCS(θ) for qubits:

$$\alpha|00\rangle+\beta|01\rangle+\gamma|10\rangle+\delta|11\rangle \rightarrow \alpha|00\rangle+\beta|01\rangle+\gamma|10\rangle+e^{i\theta}\delta|11\rangle$$

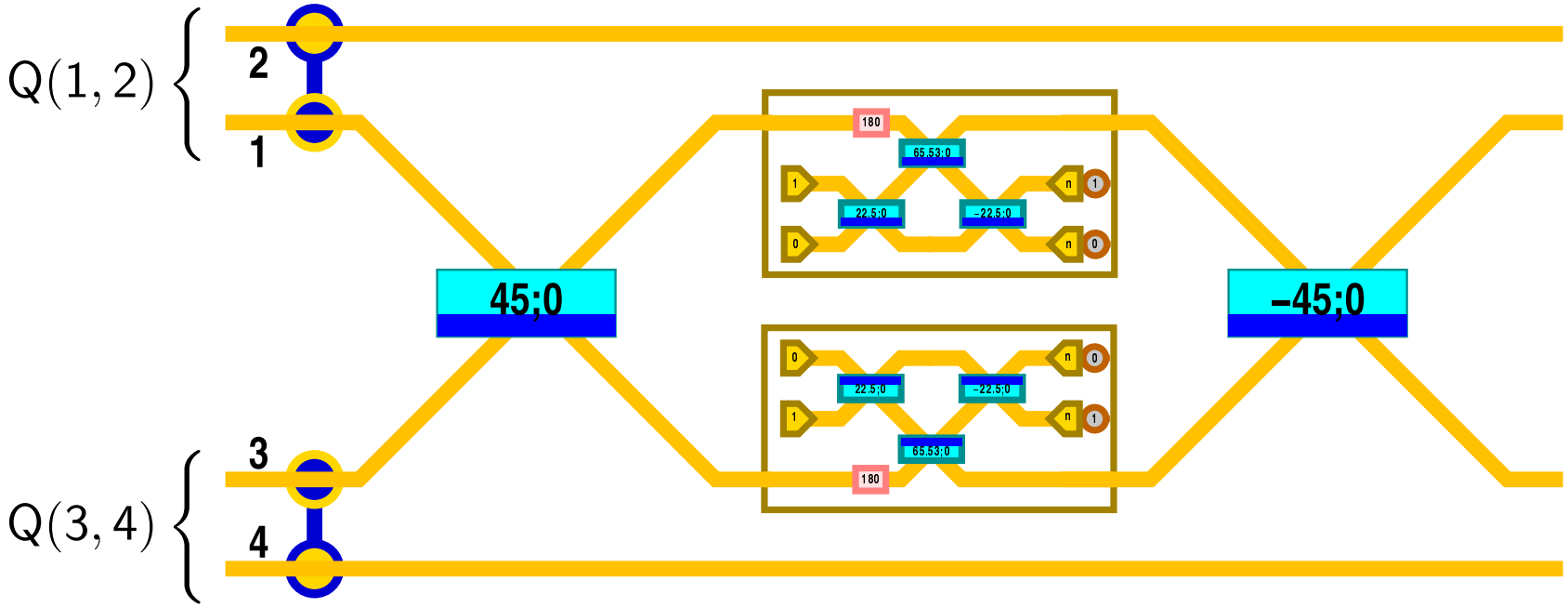

Postselected Conditional Sign Flip

- qCS(θ) for qubits:

$$\alpha|00\rangle+\beta|01\rangle+\gamma|10\rangle+\delta|11\rangle \rightarrow \alpha|00\rangle+\beta|01\rangle+\gamma|10\rangle+e^{i\theta}\delta|11\rangle$$

- Postselected CS$(180°)$, CS$_{1/16}$ with prob$_{\text{succ}} = 1/16$:

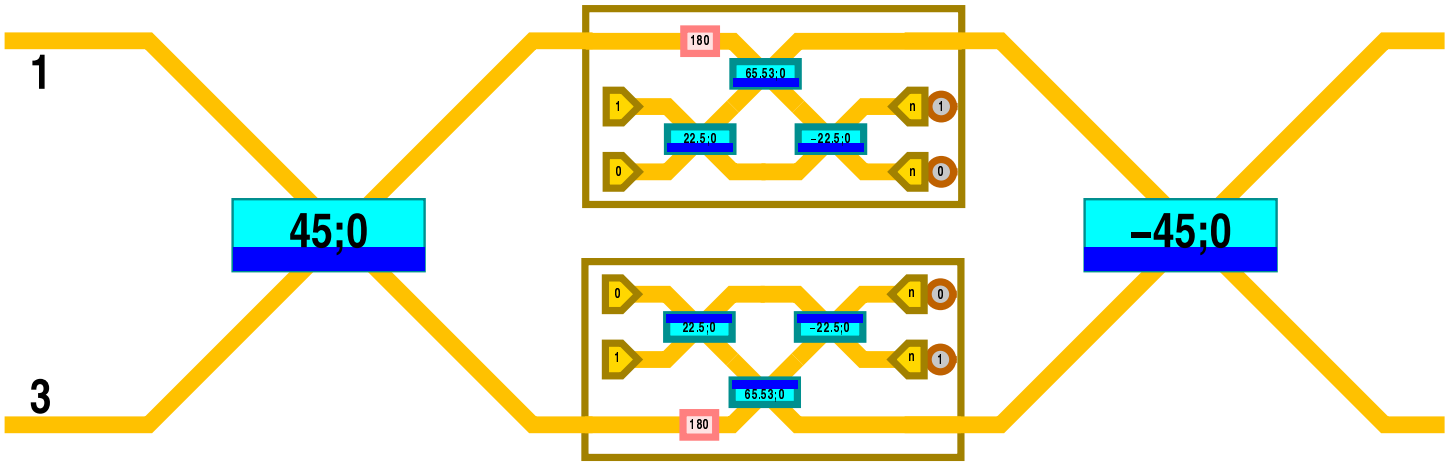

Postselected Conditional Sign Flip

- qCS(θ) for qubits:

$$\alpha|00\rangle+\beta|01\rangle+\gamma|10\rangle+\delta|11\rangle \rightarrow \alpha|00\rangle+\beta|01\rangle+\gamma|10\rangle+e^{i\theta}\delta|11\rangle$$

- Postselected CS$(180°)$, CS$_{1/16}$ with prob$_{\text{succ}} = 1/16$:

$|11\rangle_{13}$

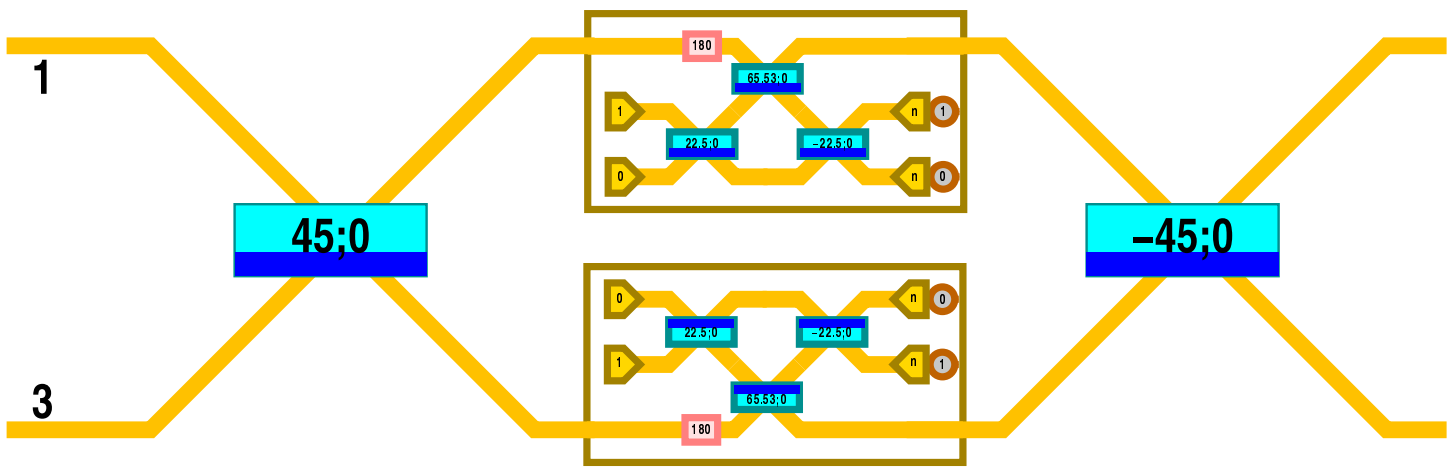

Postselected Conditional Sign Flip

- qCS(θ) for qubits:

$$\alpha|00\rangle+\beta|01\rangle+\gamma|10\rangle+\delta|11\rangle \rightarrow \alpha|00\rangle+\beta|01\rangle+\gamma|10\rangle+e^{i\theta}\delta|11\rangle$$

- Postselected CS$(180°)$, CS$_{1/16}$ with prob$_{\text{succ}} = 1/16$:

$|11\rangle_{13}$ $\qquad -|20\rangle_{13} + |02\rangle_{13}$

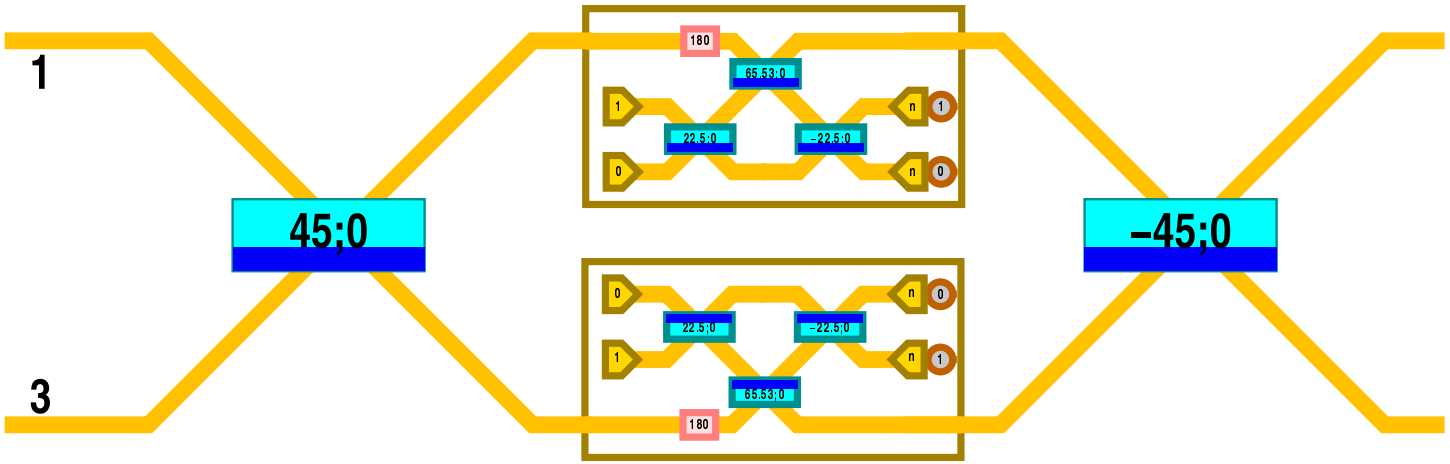

Postselected Conditional Sign Flip

- qCS(θ) for qubits:

$$\alpha|00\rangle+\beta|01\rangle+\gamma|10\rangle+\delta|11\rangle \rightarrow \alpha|00\rangle+\beta|01\rangle+\gamma|10\rangle+e^{i\theta}\delta|11\rangle$$

- Postselected CS$(180°)$, CS$_{1/16}$ with prob$_{\text{succ}} = 1/16$:

$|11\rangle_{13}$ $\quad -|20\rangle_{13}+|02\rangle_{13}$ $\quad +|20\rangle_{13}-|02\rangle_{13}$

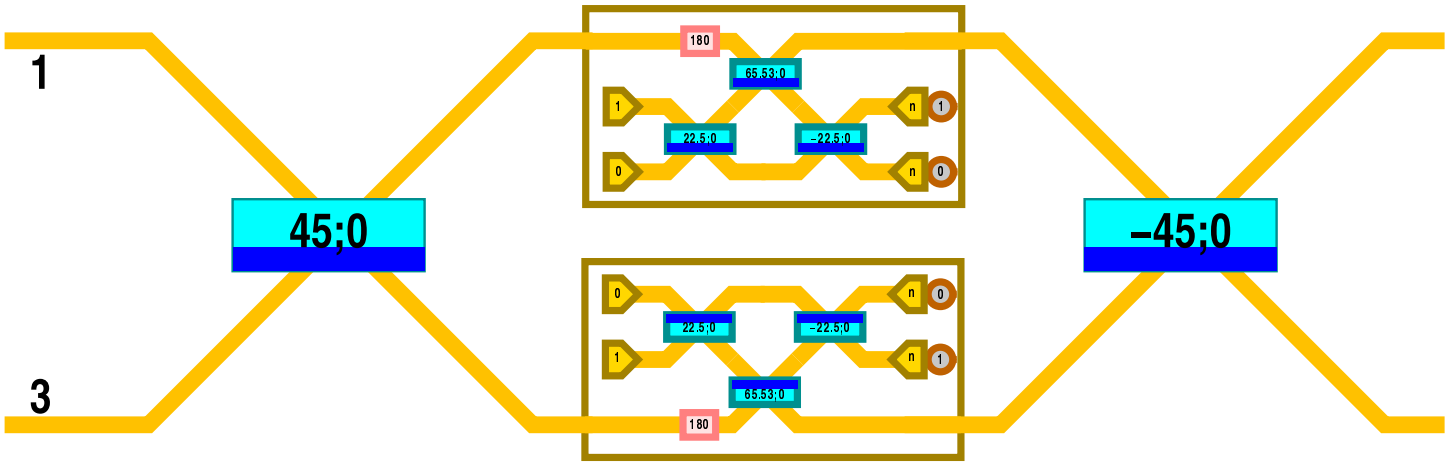

Postselected Conditional Sign Flip

- qCS(θ) for qubits:

$$\alpha|00\rangle+\beta|01\rangle+\gamma|10\rangle+\delta|11\rangle \rightarrow \alpha|00\rangle+\beta|01\rangle+\gamma|10\rangle+e^{i\theta}\delta|11\rangle$$

- Postselected CS$(180°)$, CS$_{1/16}$ with prob$_{\text{succ}} = 1/16$:

$|11\rangle_{13}$ $\quad -|20\rangle_{13}+|02\rangle_{13}$ $\quad +|20\rangle_{13}-|02\rangle_{13}$ $\quad -|11\rangle_{13}$

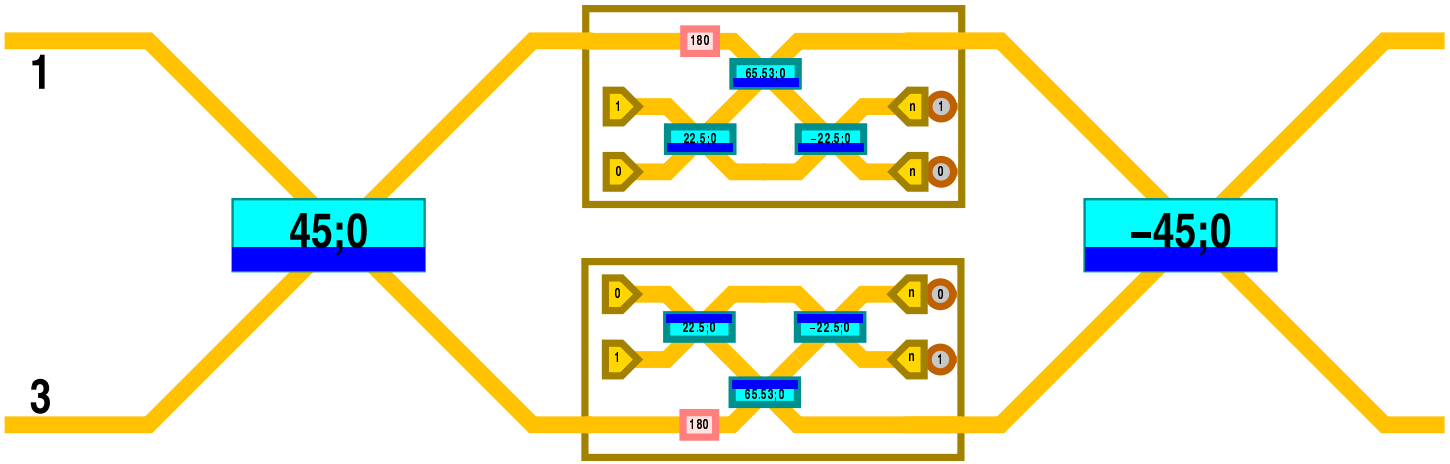

Back to: Guide

Entanglement “without” Interaction

- Entangling photons, probability $1/4$.

Output:

$$\frac{1}{\sqrt{2}}\left(|1\rangle_{\mathsf{A}}|0\rangle_{\mathsf{B}} + |0\rangle_{\mathsf{A}}|1\rangle_{\mathsf{B}}\right)$$

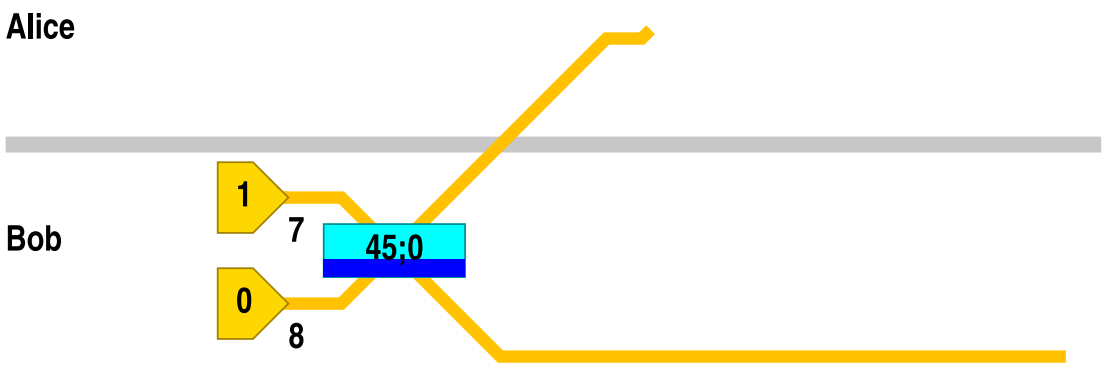

Entanglement “without” Interaction

- Entangling photons, probability $1/4$.

Output:

$$\frac{1}{2}\Big(|11\rangle_A|00\rangle_B + |10\rangle_A|01\rangle_B + |01\rangle_A|10\rangle_B + |00\rangle_A|11\rangle_B\Big)$$

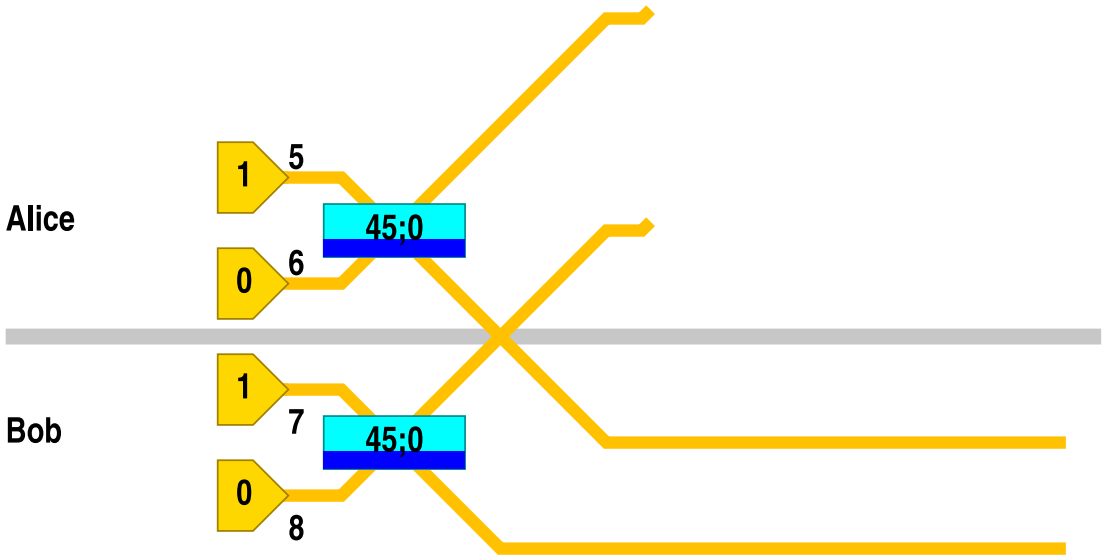

Entanglement “without” Interaction

- Entangling photons, probability $1/4$.

Output:

$$\frac{1}{2}\Big(|10\rangle_A|01\rangle_B + |01\rangle_A|10\rangle_B \Big)$$

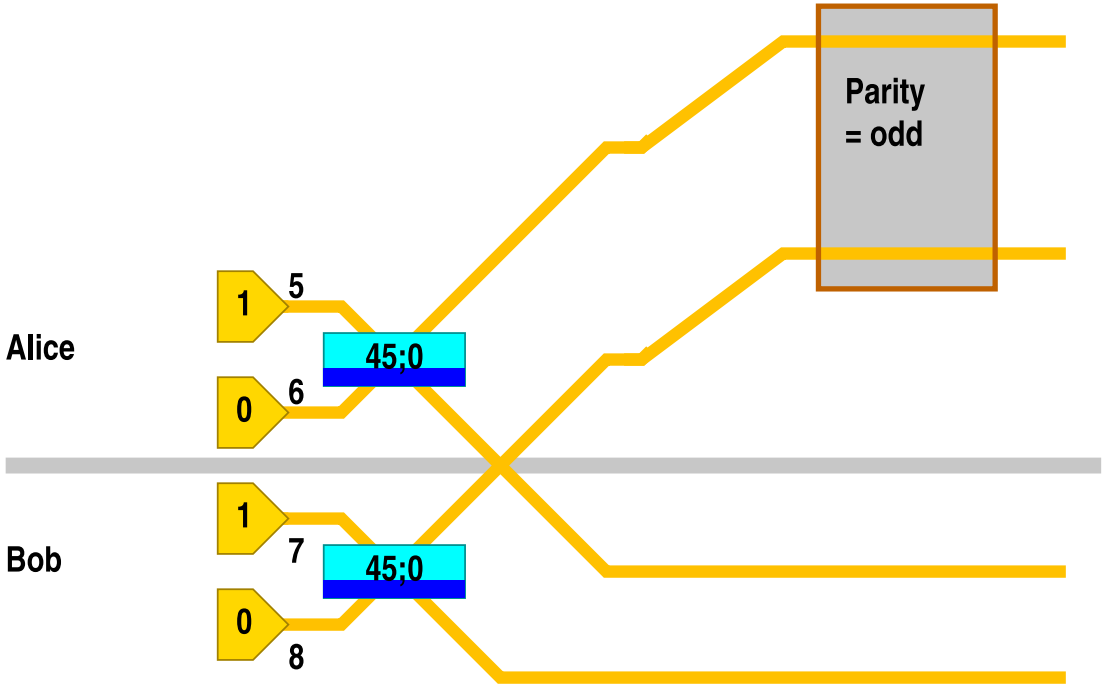

Entanglement “without” Interaction

- Entangling photons, probability $1/4$.

$$\frac{1}{\sqrt{2}}\big(|10\rangle|01\rangle + |01\rangle|10\rangle\big)$$

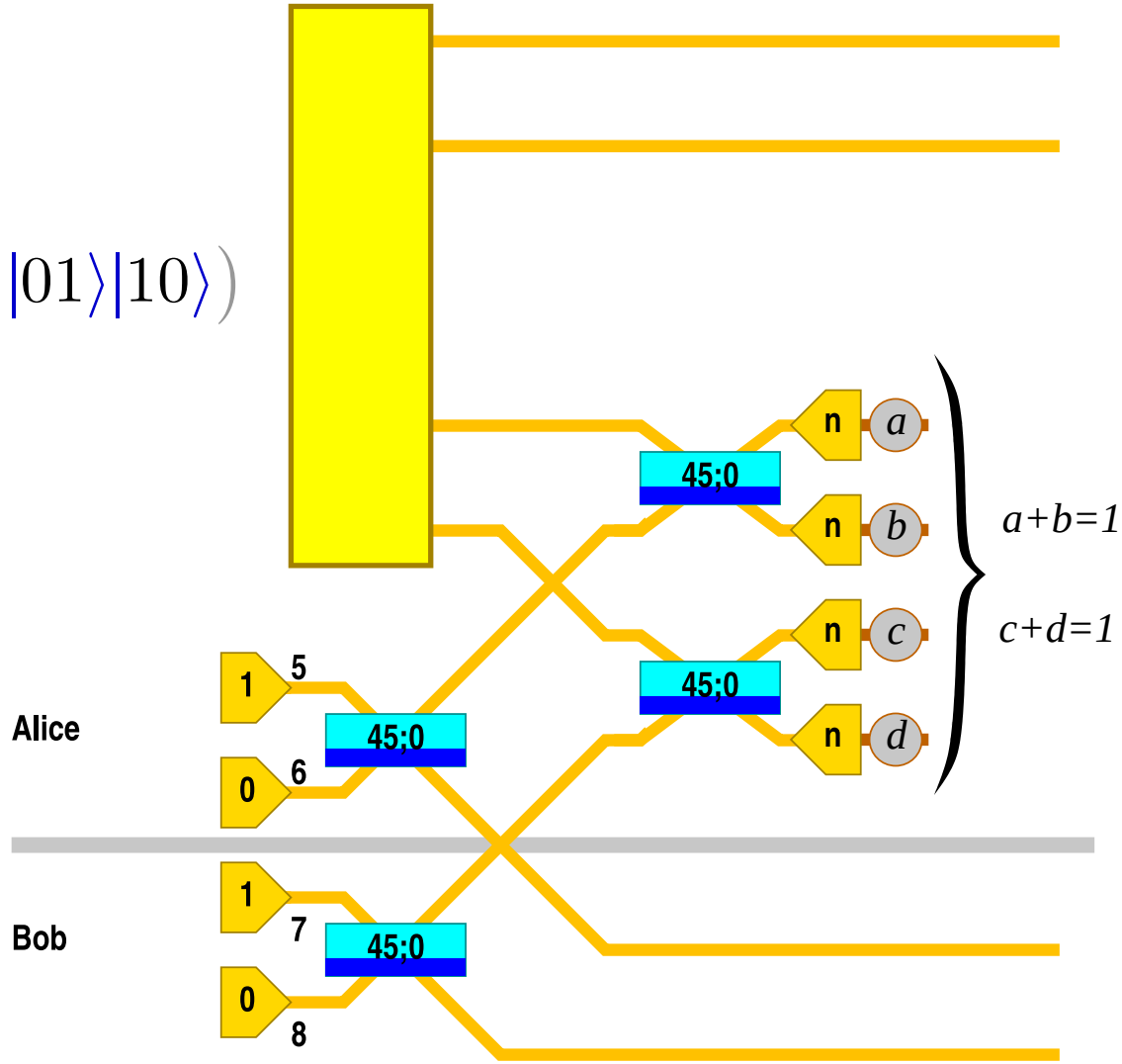

Output:

$$\frac{1}{\sqrt{8}}\Big((-1)^a\,|10\rangle_A|01\rangle_B + (-1)^c\,|01\rangle_A|10\rangle_B\Big)$$

Entanglement “without” Interaction

- Entangling photons, probability $1/4$.

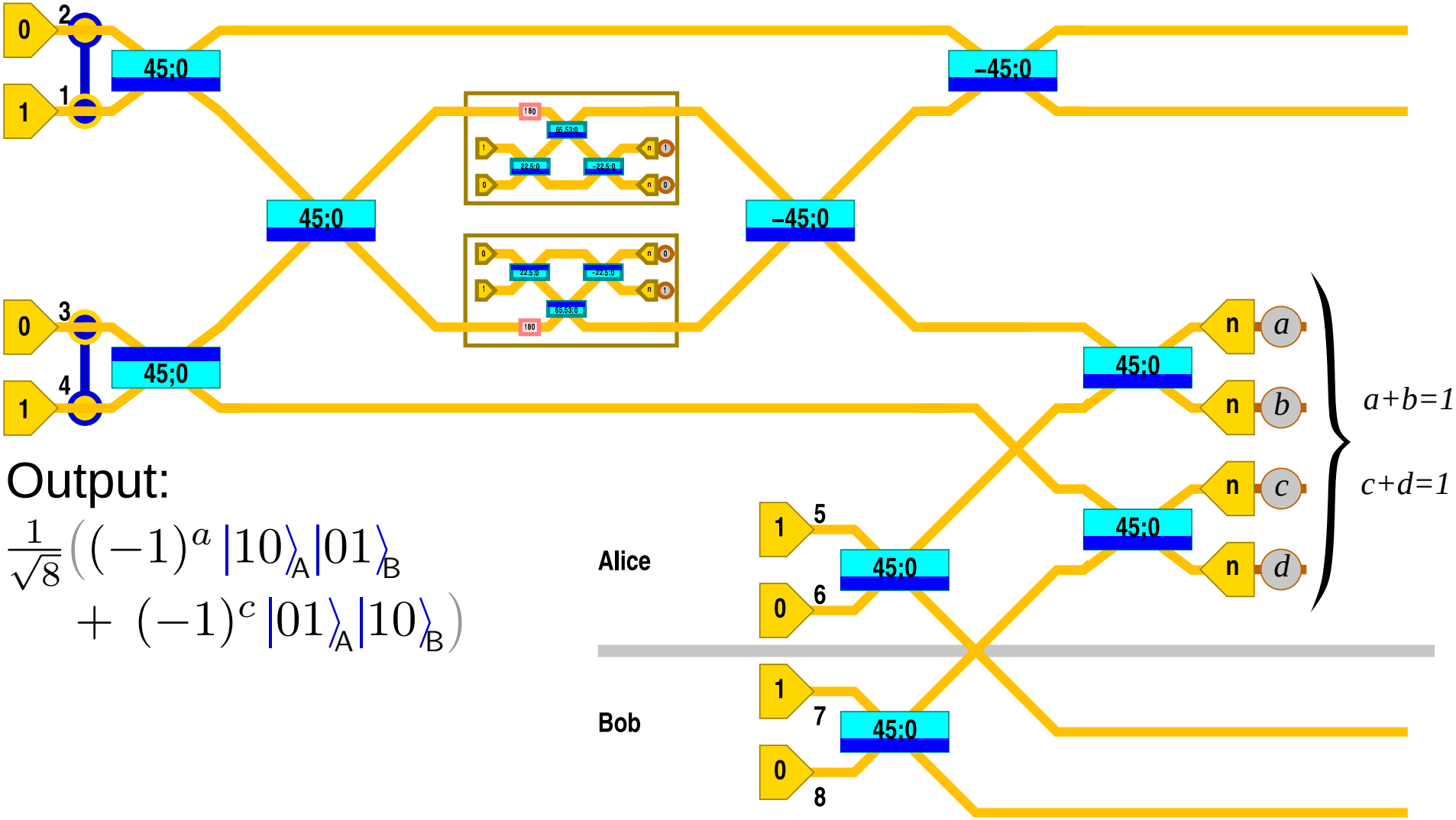

Output:

$$\frac{1}{\sqrt{8}}\Big((-1)^a\,|10\rangle_A|01\rangle_B + (-1)^c\,|01\rangle_A|10\rangle_B\Big)$$

Back to: Guide

Trivial Teleportation

- Teleportation of one mode, success probability $1/2$:

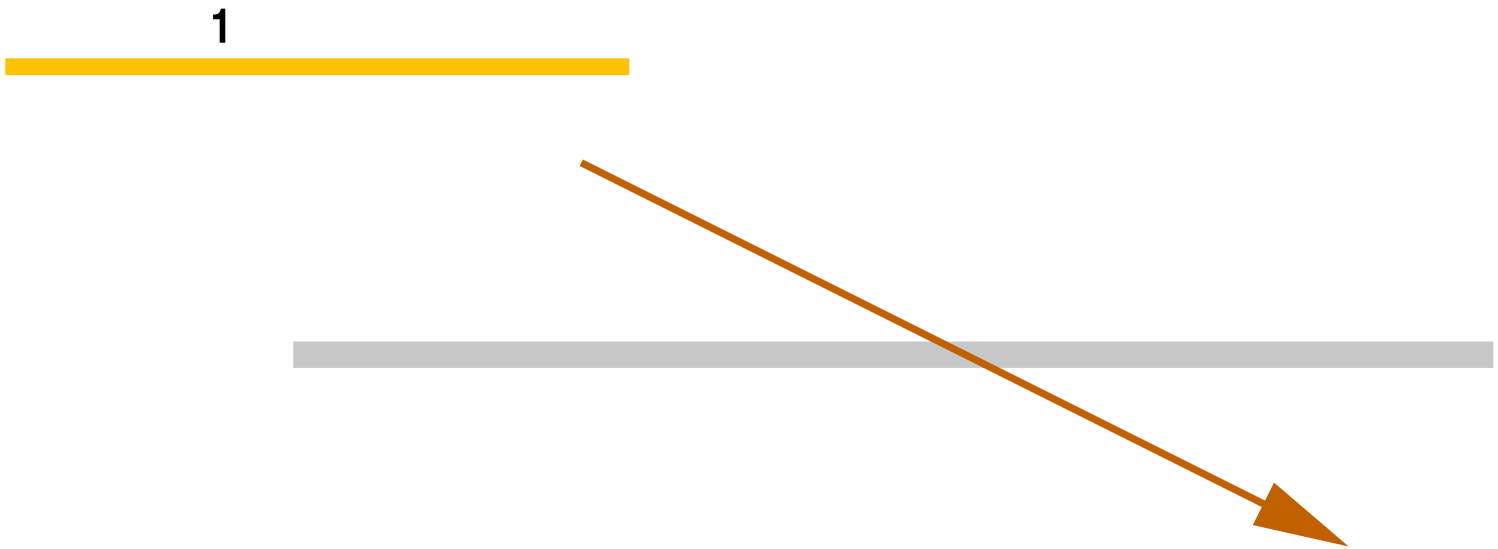

$$\left(\alpha|0\rangle_1 + \beta|1\rangle_1\right) \longrightarrow$$

Trivial Teleportation

- Teleportation of one mode, success probability $1/2$:

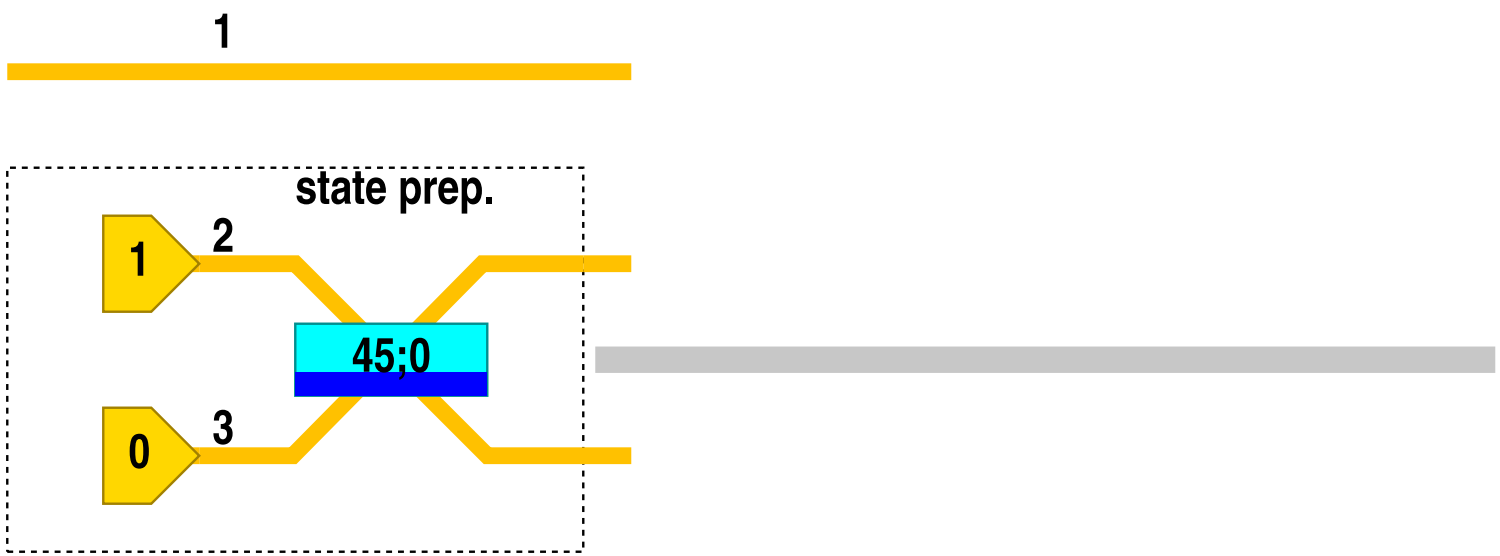

$$\left(\alpha|0\rangle_1 + \beta|1\rangle_1\right) \longrightarrow \left(\alpha|0\rangle_1 + \beta|1\rangle_1\right) \otimes \frac{1}{\sqrt{2}}\left(|10\rangle_{23} + |01\rangle_{23}\right)$$

Trivial Teleportation

- Teleportation of one mode, success probability $1/2$:

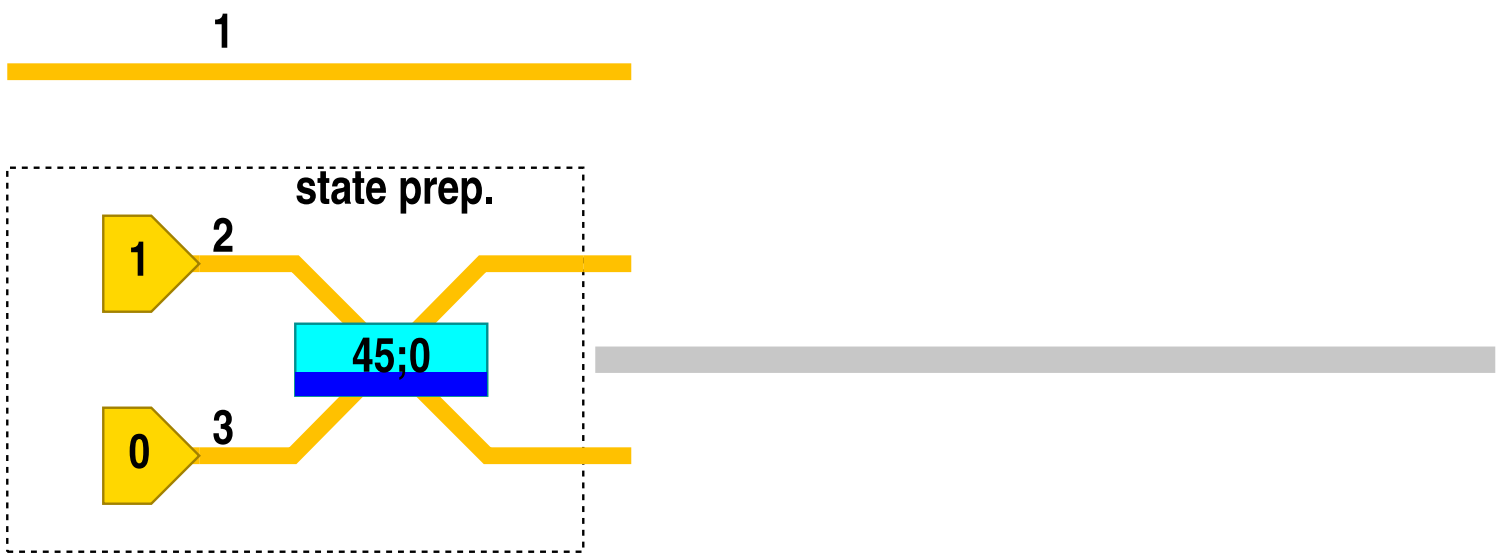

$$\left(\alpha|0\rangle_1 + \beta|1\rangle_1\right) \longrightarrow$$

$$\left.\begin{array}{l} \frac{1}{\sqrt{2}}\left(\alpha|010\rangle_{123} + \beta|101\rangle_{123}\right) \\ + \\ \frac{1}{\sqrt{2}}\left(\alpha|001\rangle_{123} + \beta|110\rangle_{123}\right) \end{array}\right\} \rightarrow$$

Trivial Teleportation

- Teleportation of one mode, success probability $1/2$:

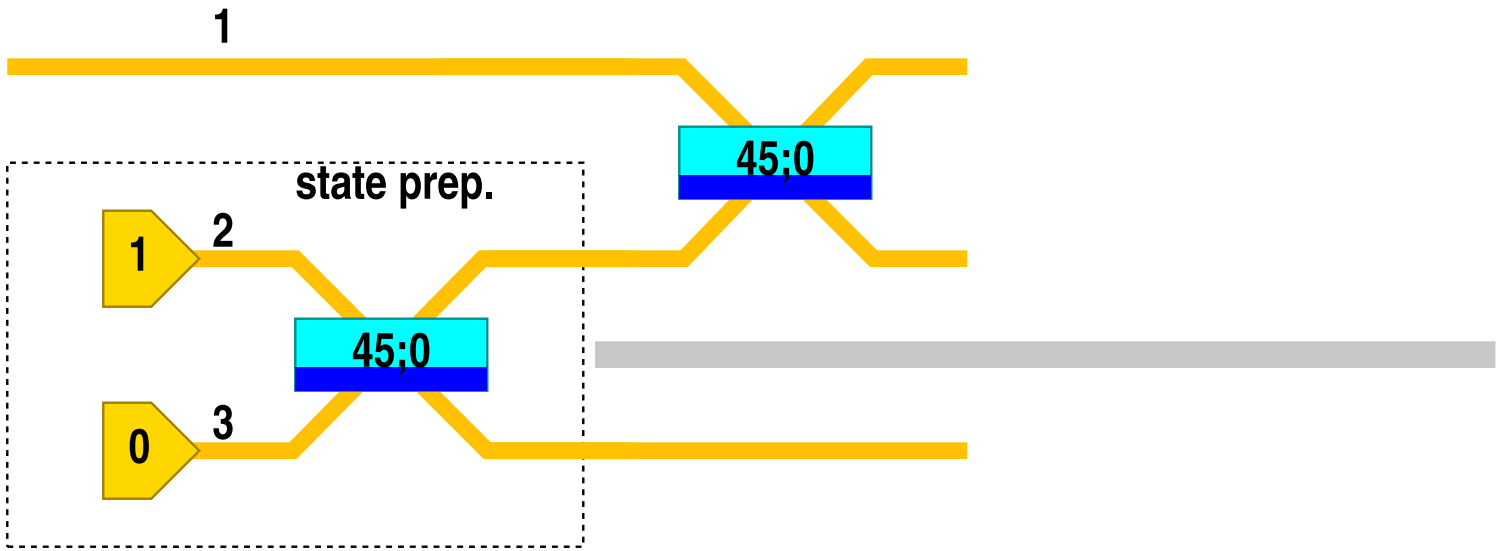

$$\left(\alpha|0\rangle_1 + \beta|1\rangle_1\right) \longrightarrow$$

$$\left.\begin{array}{l} \frac{1}{\sqrt{2}}\left(\alpha|010\rangle_{123} + \beta|101\rangle_{123}\right) \\ + \\ \frac{1}{\sqrt{2}}\left(\alpha|001\rangle_{123} + \beta|110\rangle_{123}\right) \end{array}\right\} \rightarrow \begin{array}{l} \frac{1}{2}\left(-\alpha|100\rangle_{123} + \beta|101\rangle_{123}\right) + \\ \frac{1}{2}\left(+\alpha|010\rangle_{123} + \beta|011\rangle_{123}\right) + \\ \ldots (0 \text{ or } 2 \text{ photons in modes } 1, 2) \end{array}$$

Trivial Teleportation

- Teleportation of one mode, success probability $1/2$:

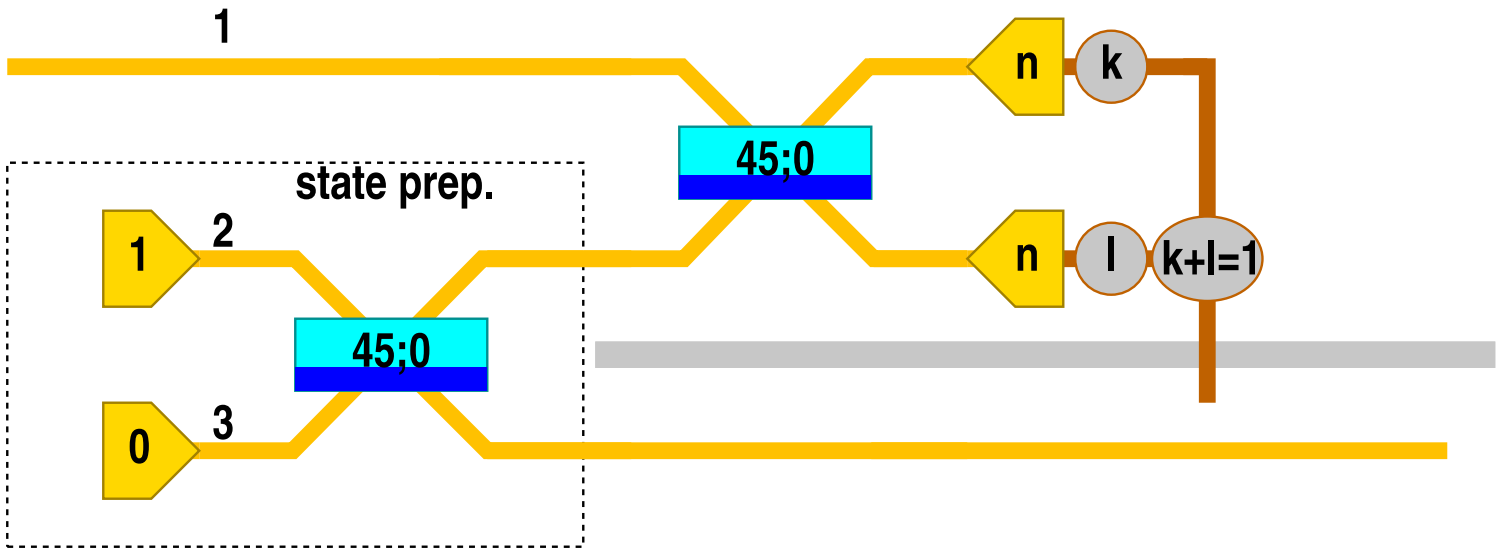

$$\left(\alpha|0\rangle_1 + \beta|1\rangle_1\right) \longrightarrow$$

$$\frac{1}{2}\left(-\alpha|10\rangle_{12}|0\rangle_3 + \beta|10\rangle_{12}|1\rangle_3\right)$$

or

$$\frac{1}{2}\left(+\alpha|01\rangle_{12}|0\rangle_3 + \beta|01\rangle_{12}|1\rangle_3\right)$$

Trivial Teleportation

- Teleportation of one mode, success probability $1/2$:

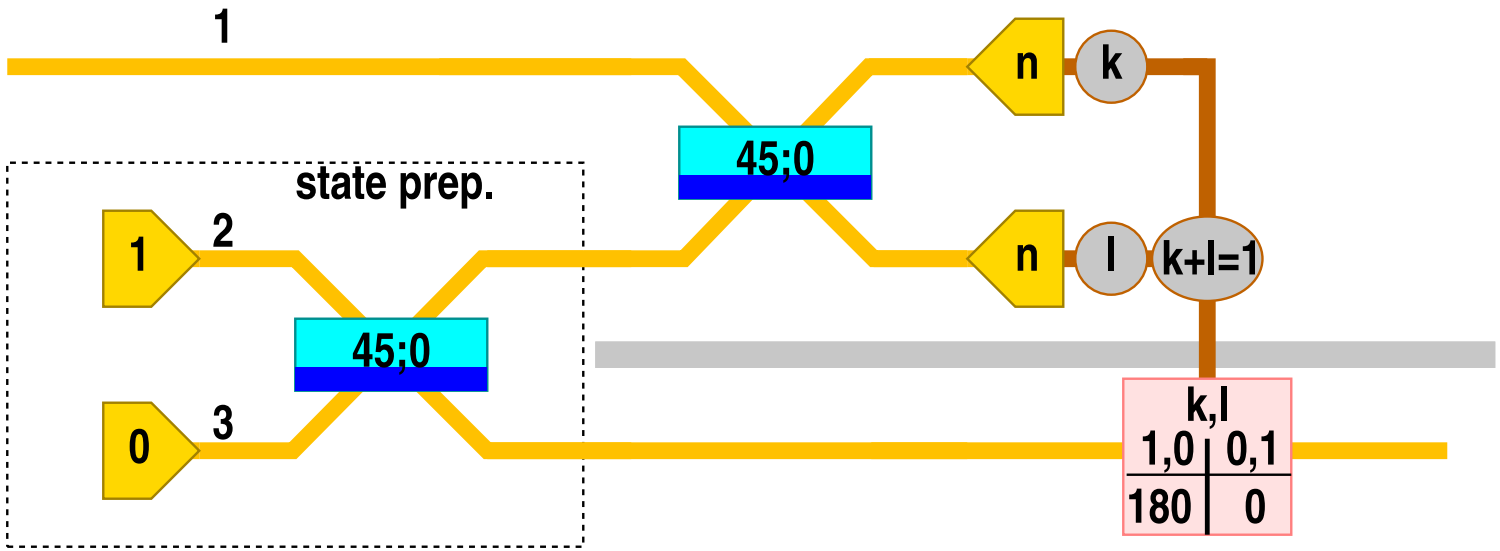

$$\left(\alpha|0\rangle_1 + \beta|1\rangle_1\right) \longrightarrow$$

$$\frac{1}{2}\left(-\alpha|0\rangle_3 - \beta|1\rangle_3\right)$$

or

$$\frac{1}{2}\left(+\alpha|0\rangle_3 + \beta|1\rangle_3\right)$$

Operation $=$ State $+$ Teleportation

- Implement $\mathsf{CS}_{1/4}$ using teleportation:

Operation $=$ State $+$ Teleportation

- Implement $\mathrm{CS}_{1/4}$ using teleportation:

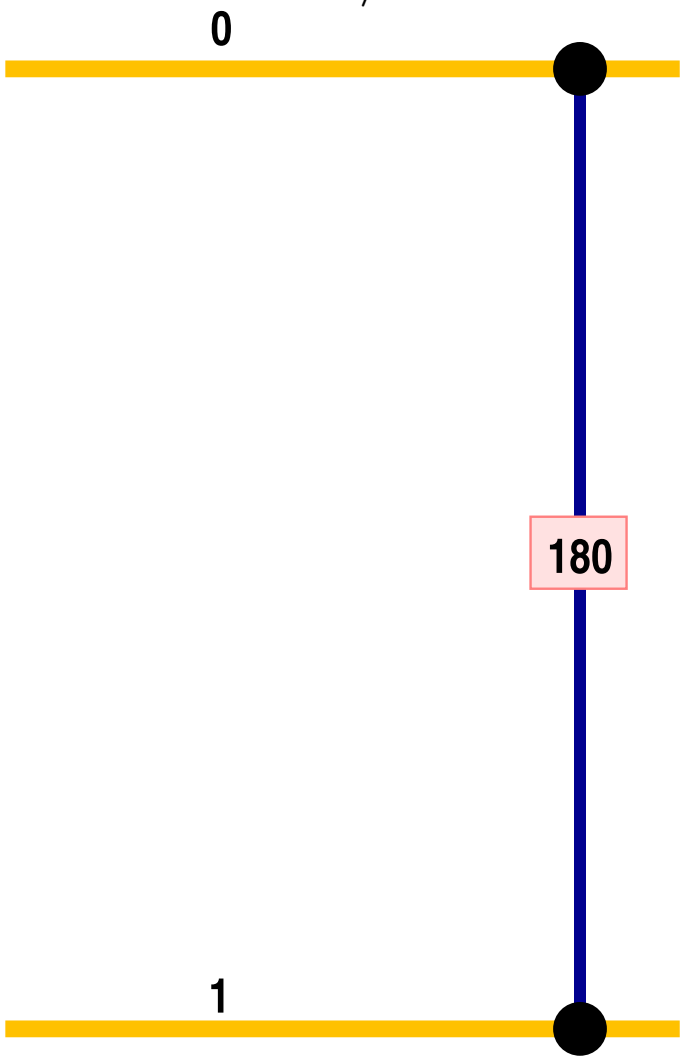

Operation = State + Teleportation

- Implement $CS_{1/4}$ using teleportation:

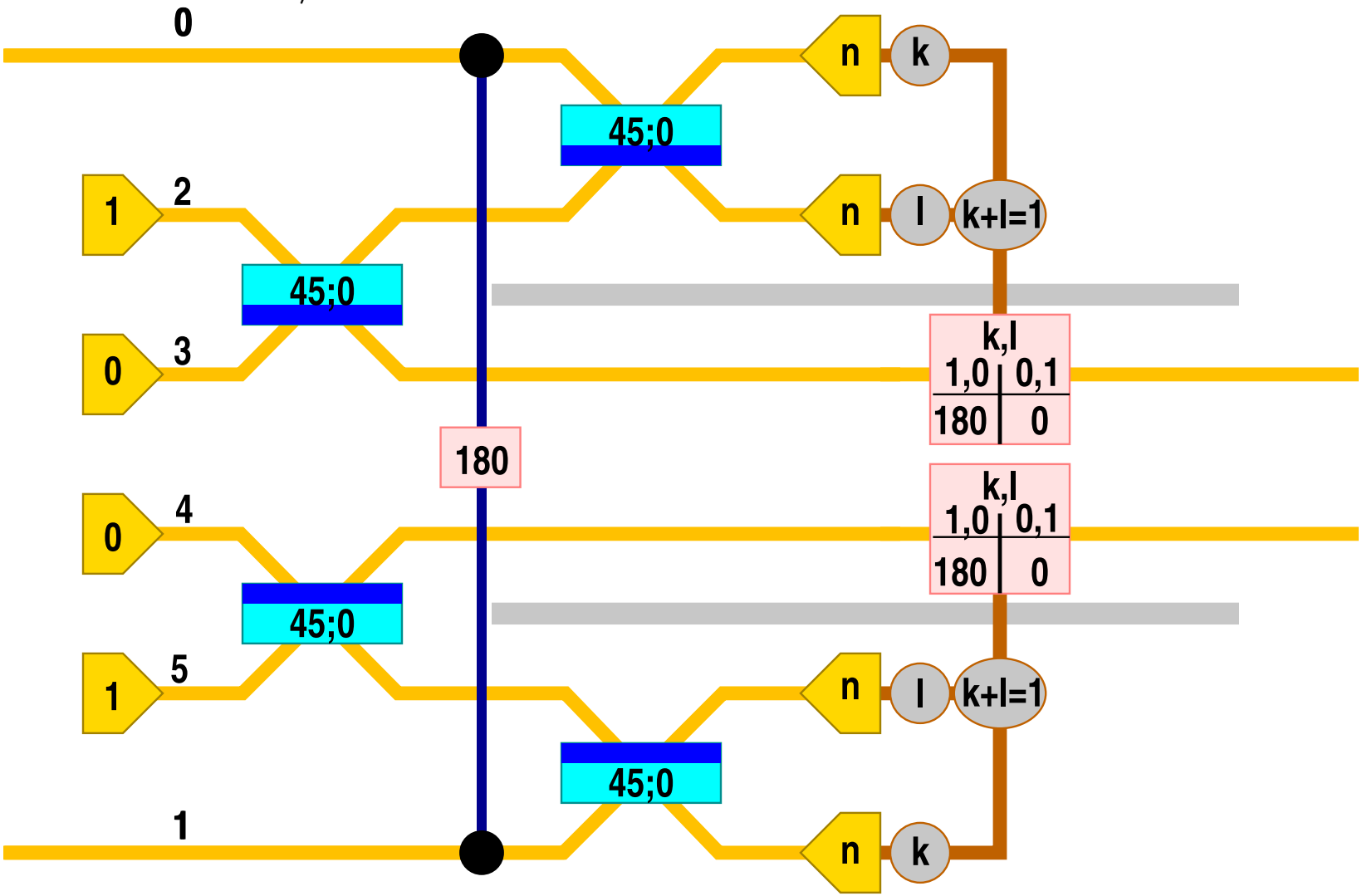

Operation = State + Teleportation

- Implement $CS_{1/4}$ using teleportation:

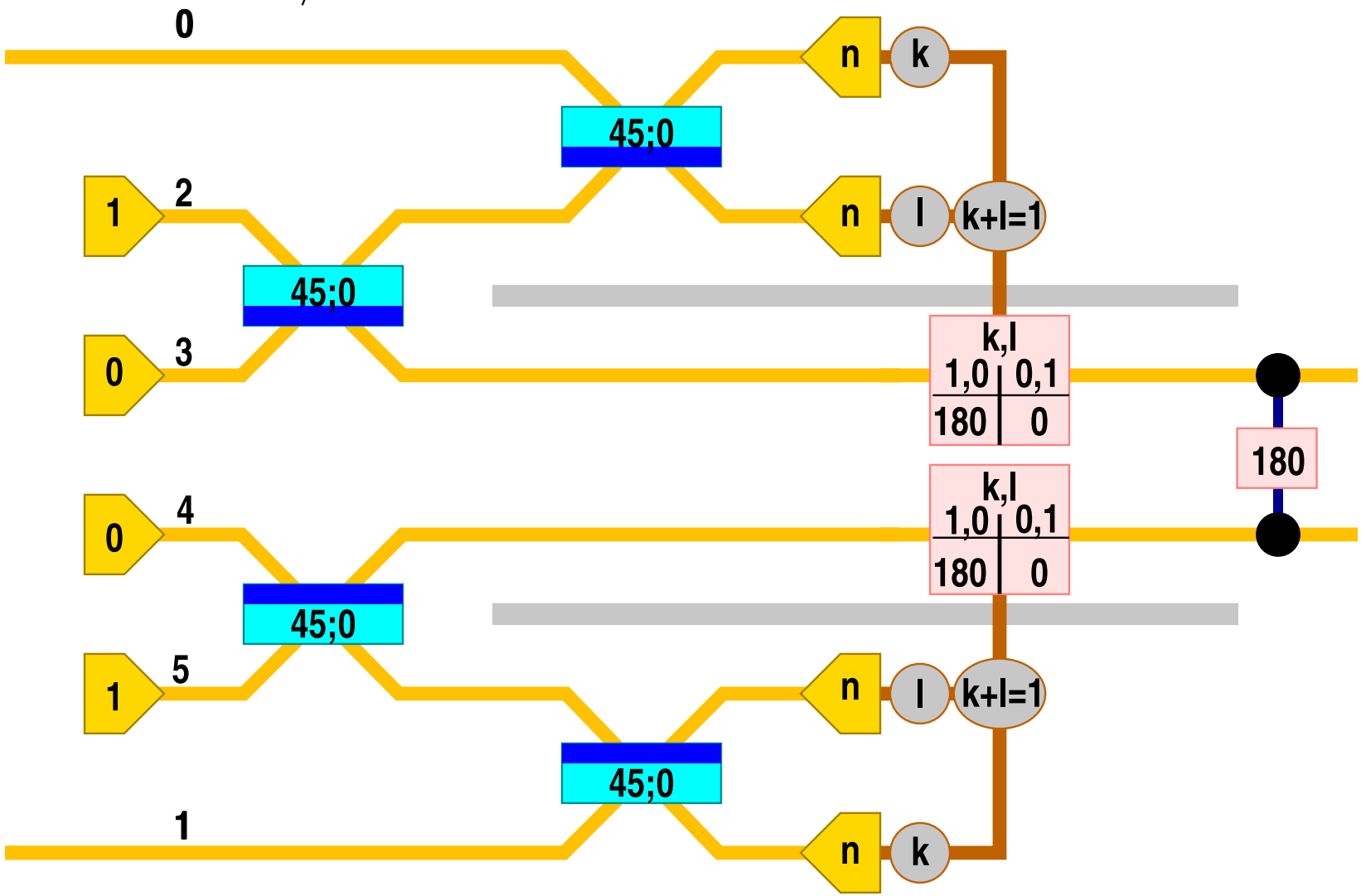

Operation = State + Teleportation

- Implement $CS_{1/4}$ using teleportation:

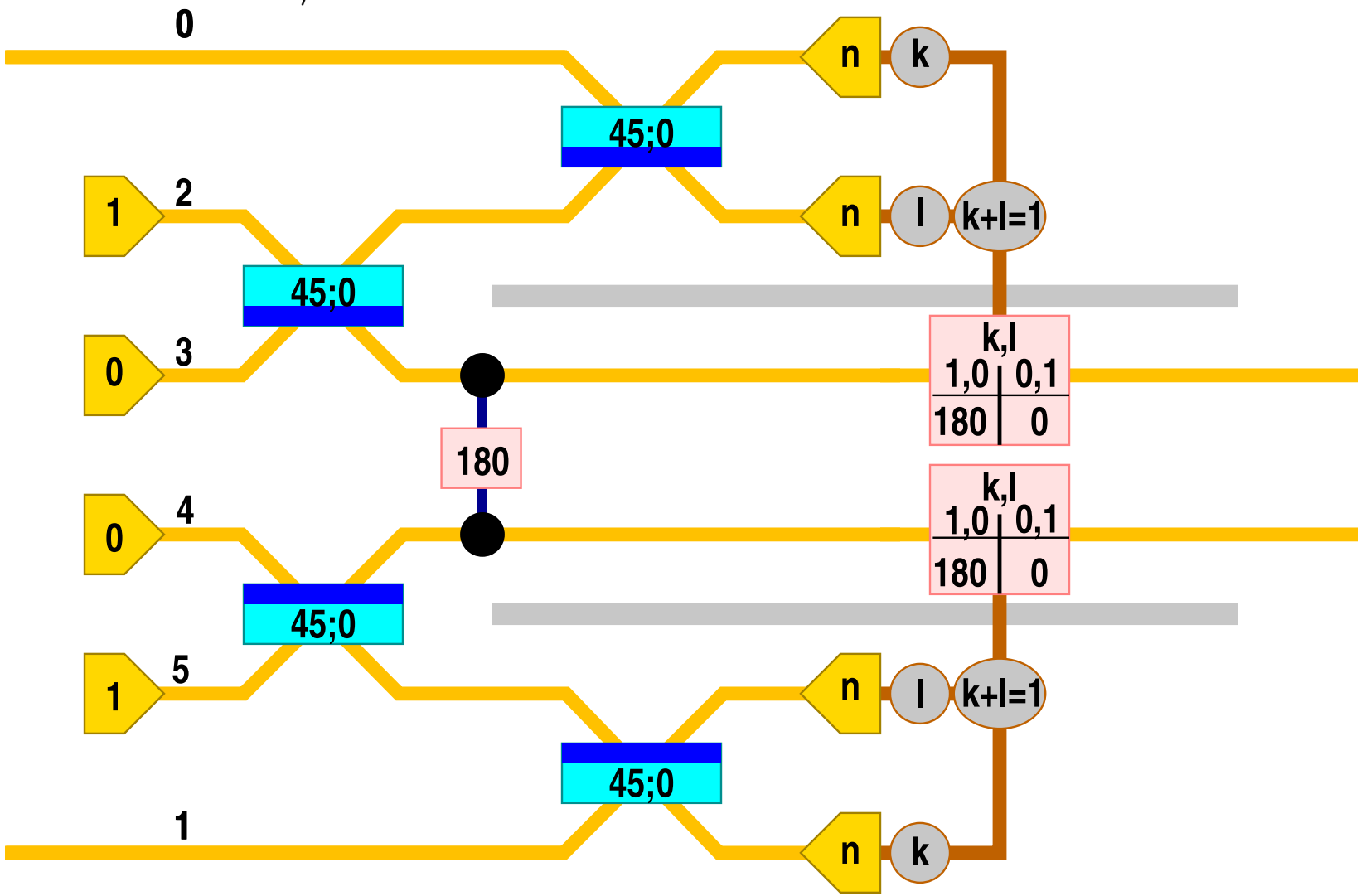

Operation = State + Teleportation

- Implement $CS_{1/4}$ using teleportation:

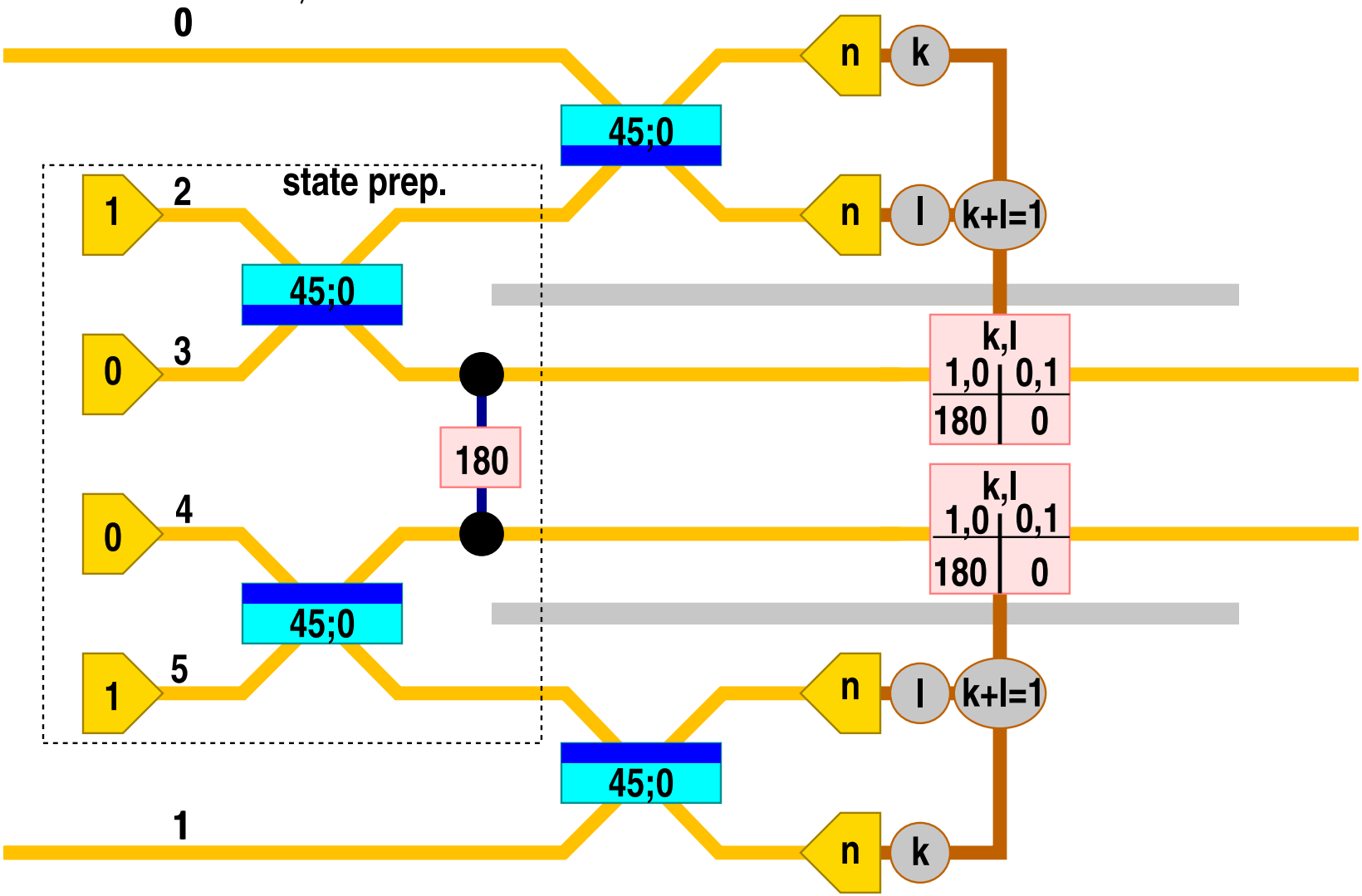

Gottesman&Chuang 1999 [17]

State Preparation for $CS_{1/4}$

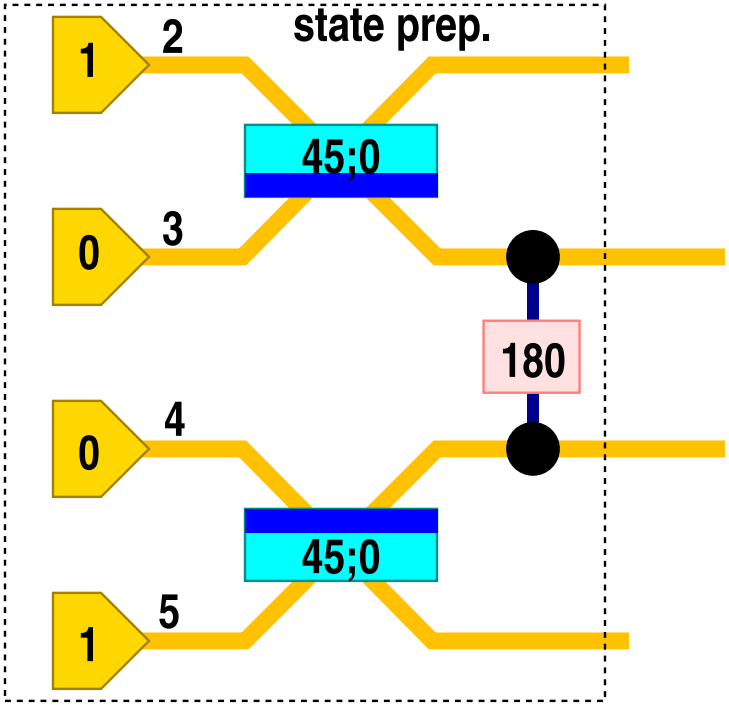

State Preparation for $CS_{1/4}$

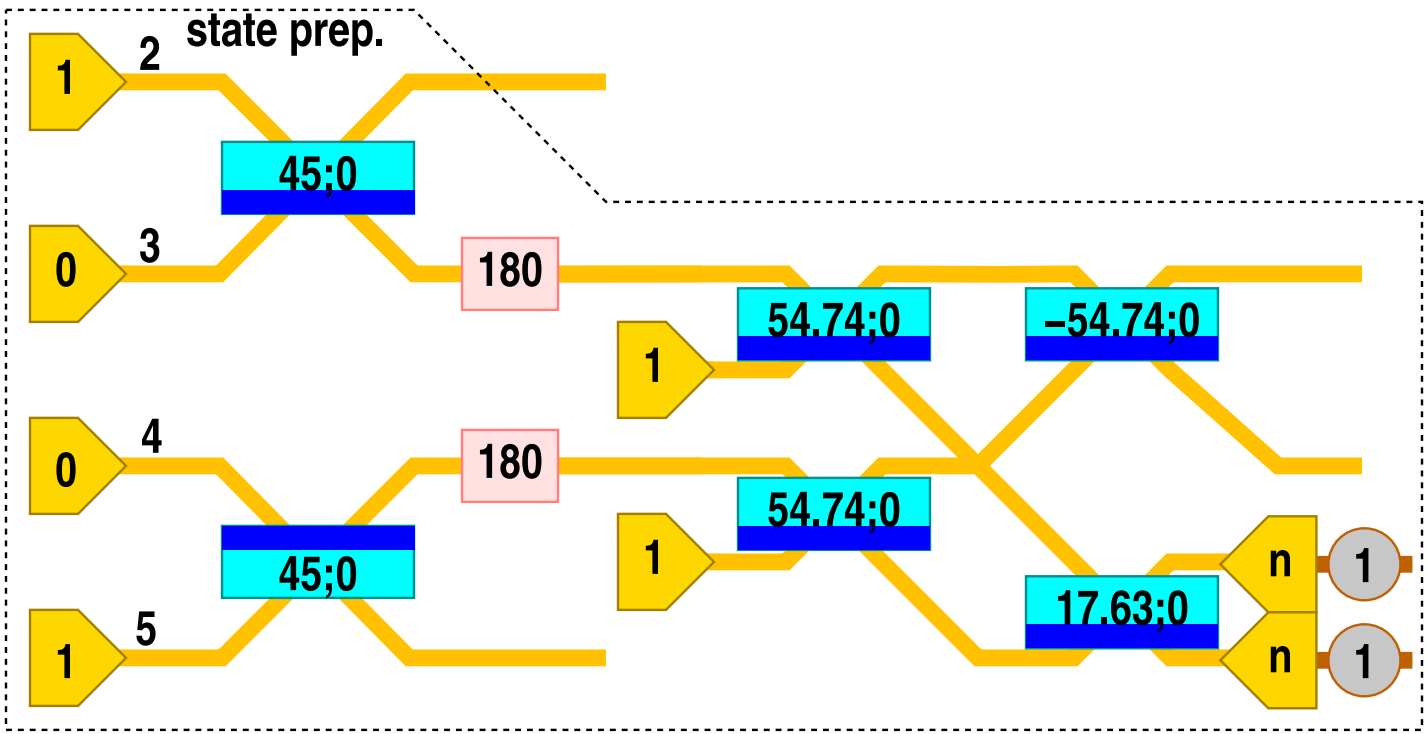

- Using: Two-mode non-linear sign shift with $\text{prob}_{\text{succ}} = 1/13.5$.

Go to: Details.

Teleportation with Probability $k/(k+1)$

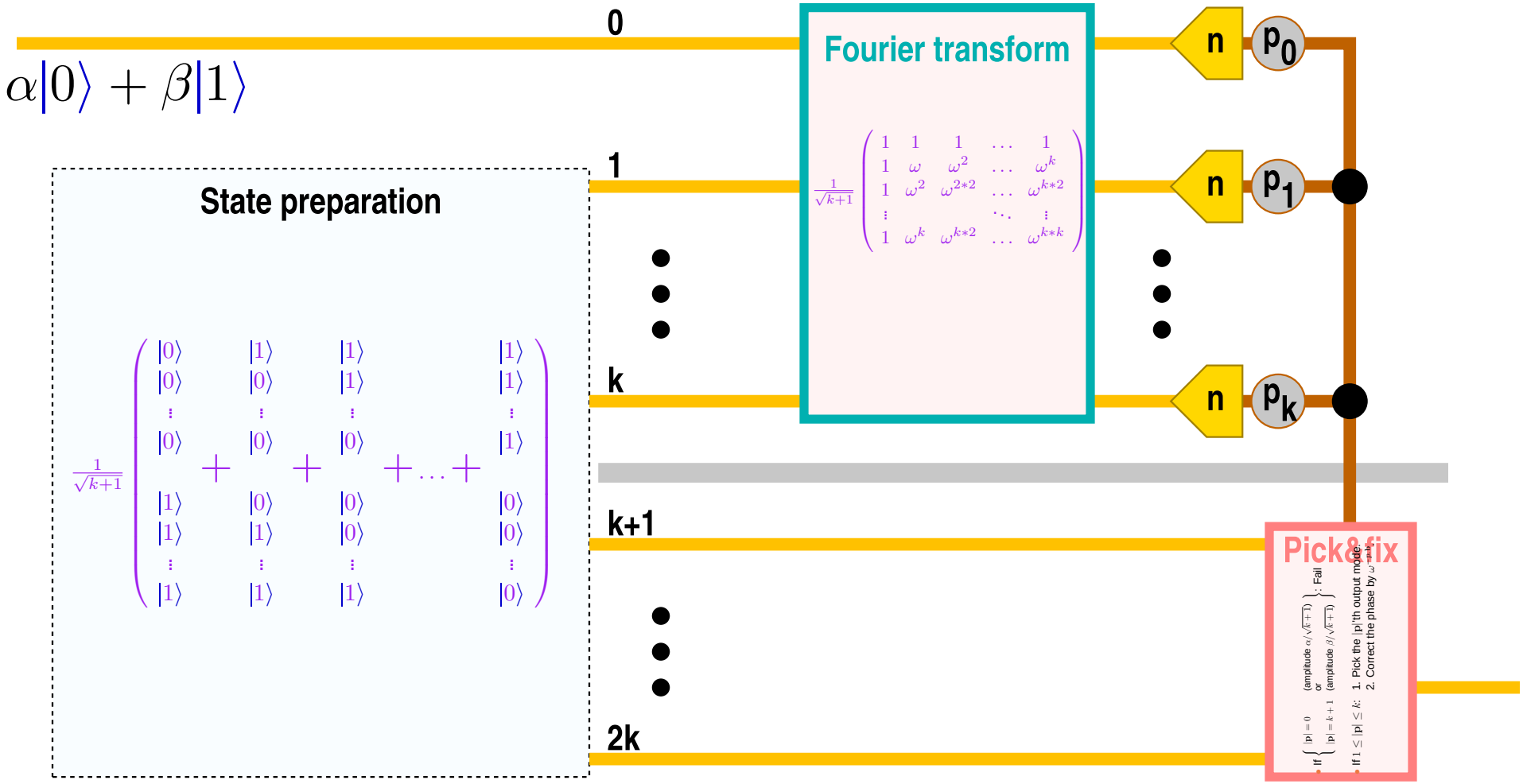

Teleportation with Probability $k/(k+1)$

$\alpha|0\rangle + \beta|1\rangle$

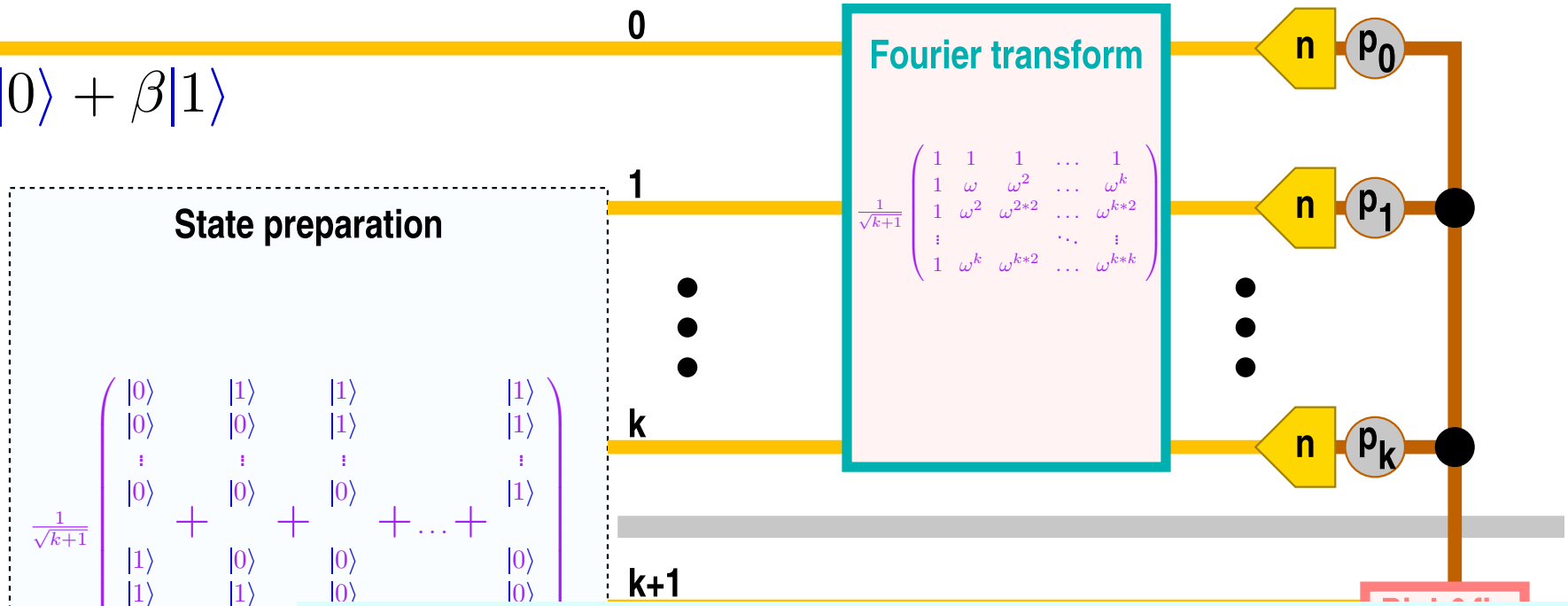

- If $\left\{ \begin{array}{ll} |\mathbf{p}| = 0 & \text{(amplitude } \alpha/\sqrt{k+1}\text{)} \\ & \text{or} \\ |\mathbf{p}| = k+1 & \text{(amplitude } \beta/\sqrt{k+1}\text{)} \end{array} \right\}$: Fail
- If $1 \leq |\mathbf{p}| \leq k$: 1. Pick the $|\mathbf{p}|$'th output mode.
  2. Correct the phase by $\omega^{-p.\mathbf{b}}$.

Forward to: Ts_k | $\mathsf{CS}_{4/9}$

Tel_k: Initial State

$$k = 1: \ \mathsf{Ts}_1 = \frac{1}{\sqrt{2}} \left(\begin{array}{c} |0\rangle \\ |1\rangle \end{array} + \begin{array}{c} |1\rangle \\ |0\rangle \end{array} \right)$$

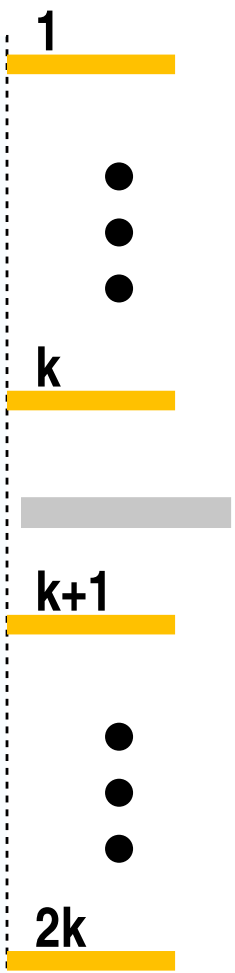

Tel_k: Initial State

$$\mathsf{Ts}_k = \frac{1}{\sqrt{k+1}} \begin{pmatrix} |0\rangle & & |1\rangle & & |1\rangle & & & |1\rangle \\ |0\rangle & & |0\rangle & & |1\rangle & & & |1\rangle \\ \vdots & & \vdots & & \vdots & & & \vdots \\ |0\rangle & & |0\rangle & & |0\rangle & & & |1\rangle \\ & + & & + & & + \ldots + & & \\ |1\rangle & & |0\rangle & & |0\rangle & & & |0\rangle \\ |1\rangle & & |1\rangle & & |0\rangle & & & |0\rangle \\ \vdots & & \vdots & & \vdots & & & \vdots \\ |1\rangle & & |1\rangle & & |1\rangle & & & |0\rangle \end{pmatrix}$$

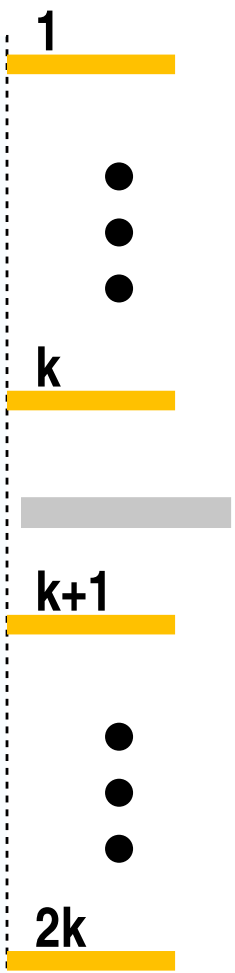

Tel$_k$: Adjoin Input

$$\alpha|0\rangle + \beta|1\rangle$$

$$\frac{1}{\sqrt{k+1}}\begin{pmatrix} |0\rangle & & |1\rangle & & |1\rangle & & |1\rangle & \\ |0\rangle & & |0\rangle & & |1\rangle & & |1\rangle & \\ |0\rangle & & |0\rangle & & |0\rangle & & |1\rangle & \\ \vdots & + & \vdots & + & \vdots & + & \vdots & + \dots \\ |1\rangle & & |0\rangle & & |0\rangle & & |0\rangle & \\ |1\rangle & & |1\rangle & & |0\rangle & & |0\rangle & \\ |1\rangle & & |1\rangle & & |1\rangle & & |0\rangle & \\ \vdots & & \vdots & & \vdots & & \vdots & \end{pmatrix}$$

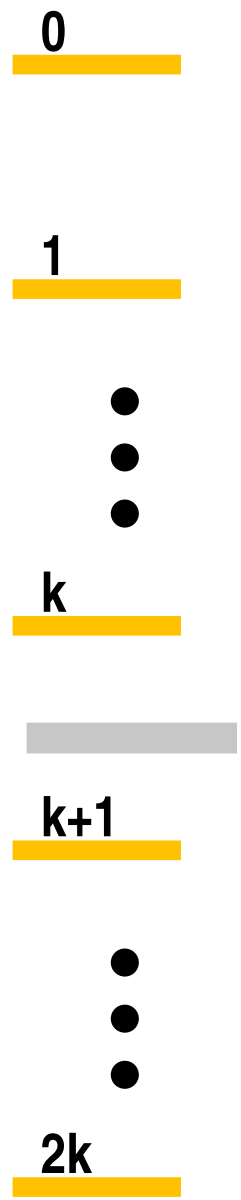

Tel$_k$: Adjoin Input

$$\frac{1}{\sqrt{k+1}}\begin{pmatrix} \alpha|0\rangle & & \alpha|0\rangle & & \alpha|0\rangle & & \alpha|0\rangle & \\ |0\rangle & & |1\rangle & & |1\rangle & & |1\rangle & \\ |0\rangle & & |0\rangle & & |1\rangle & & |1\rangle & \\ |0\rangle & & |0\rangle & & |0\rangle & & |1\rangle & \\ \vdots & + & \vdots & + & \vdots & + & \vdots & + \dots \\ |1\rangle & & |0\rangle & & |0\rangle & & |0\rangle & \\ |1\rangle & & |1\rangle & & |0\rangle & & |0\rangle & \\ |1\rangle & & |1\rangle & & |1\rangle & & |0\rangle & \\ \vdots & & \vdots & & \vdots & & \vdots & \end{pmatrix}$$

$$+\frac{1}{\sqrt{k+1}}\begin{pmatrix} \beta|1\rangle & & \beta|1\rangle & & \beta|1\rangle & & \beta|1\rangle & \\ |0\rangle & & |1\rangle & & |1\rangle & & |1\rangle & \\ |0\rangle & & |0\rangle & & |1\rangle & & |1\rangle & \\ |0\rangle & & |0\rangle & & |0\rangle & & |1\rangle & \\ \vdots & + & \vdots & + & \vdots & + & \vdots & + \dots \\ |1\rangle & & |0\rangle & & |0\rangle & & |0\rangle & \\ |1\rangle & & |1\rangle & & |0\rangle & & |0\rangle & \\ |1\rangle & & |1\rangle & & |1\rangle & & |0\rangle & \\ \vdots & & \vdots & & \vdots & & \vdots & \end{pmatrix}$$

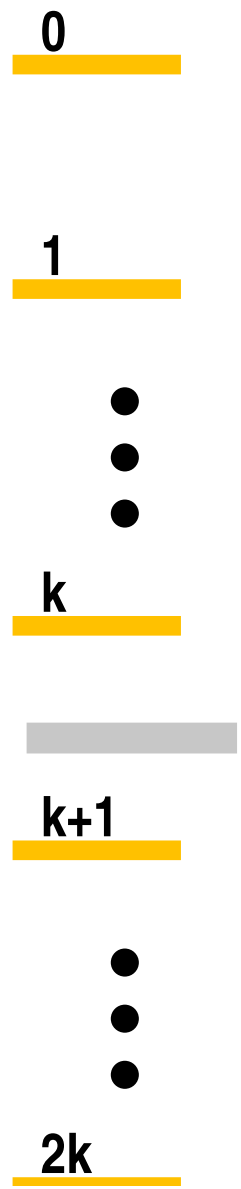

Back to: Tel$_k$ network

Tel_k: Adjoin Input

$$\frac{1}{\sqrt{k+1}}\begin{pmatrix} \alpha|0\rangle \\ |0\rangle \\ |0\rangle \\ |0\rangle \\ \vdots \\ |1\rangle \\ |1\rangle \\ |1\rangle \\ \vdots \end{pmatrix} + \mathsf{S}\begin{pmatrix} \alpha|1\rangle \\ |0\rangle \\ |0\rangle \\ |0\rangle \\ \vdots \\ |0\rangle \\ |1\rangle \\ |1\rangle \\ \vdots \end{pmatrix} + \mathsf{S}\begin{pmatrix} \alpha|1\rangle \\ |1\rangle \\ |0\rangle \\ |0\rangle \\ \vdots \\ |0\rangle \\ |0\rangle \\ |1\rangle \\ \vdots \end{pmatrix} + \mathsf{S}\begin{pmatrix} \alpha|1\rangle \\ |1\rangle \\ |1\rangle \\ |0\rangle \\ \vdots \\ |0\rangle \\ |0\rangle \\ |0\rangle \\ \vdots \end{pmatrix} + \ldots$$

$$+ \frac{1}{\sqrt{k+1}}\begin{pmatrix} \beta|1\rangle \\ |0\rangle \\ |0\rangle \\ |0\rangle \\ \vdots \\ |1\rangle \\ |1\rangle \\ |1\rangle \\ \vdots \end{pmatrix} + \begin{pmatrix} \beta|1\rangle \\ |1\rangle \\ |0\rangle \\ |0\rangle \\ \vdots \\ |0\rangle \\ |1\rangle \\ |1\rangle \\ \vdots \end{pmatrix} + \begin{pmatrix} \beta|1\rangle \\ |1\rangle \\ |1\rangle \\ |0\rangle \\ \vdots \\ |0\rangle \\ |0\rangle \\ |1\rangle \\ \vdots \end{pmatrix} + \begin{pmatrix} \beta|1\rangle \\ |1\rangle \\ |1\rangle \\ |1\rangle \\ \vdots \\ |0\rangle \\ |0\rangle \\ |0\rangle \\ \vdots \end{pmatrix} + \ldots$$

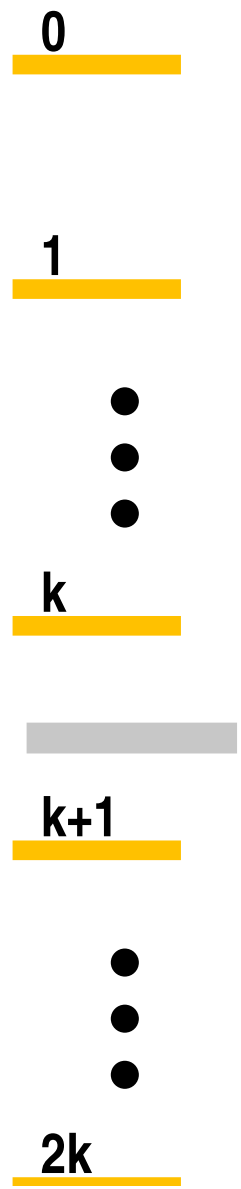

Back to: Tel_k network

Mode Fourier Transform

- Fourier transform of modes $0 \ldots k$: Define $\omega = e^{i2\pi/(k+1)}$.

$$\hat{u}(\mathsf{F}_{k+1}) = \frac{1}{\sqrt{k+1}} \begin{pmatrix} 1 & 1 & 1 & \ldots & 1 \\ 1 & \omega & \omega^2 & \ldots & \omega^k \\ 1 & \omega^2 & \omega^{2*2} & \ldots & \omega^{k*2} \\ \vdots & & & \ddots & \vdots \\ 1 & \omega^k & \omega^{k*2} & \ldots & \omega^{k*k} \end{pmatrix}$$

Mode Fourier Transform

- Fourier transform of modes $0 \ldots k$: Define $\omega = e^{i2\pi/(k+1)}$.

$$\hat{u}(\mathsf{F}_{k+1}) = \frac{1}{\sqrt{k+1}} \begin{pmatrix} 1 & 1 & 1 & \ldots & 1 \\ 1 & \omega & \omega^2 & \ldots & \omega^k \\ 1 & \omega^2 & \omega^{2*2} & \ldots & \omega^{k*2} \\ \vdots & & & \ddots & \vdots \\ 1 & \omega^k & \omega^{k*2} & \ldots & \omega^{k*k} \end{pmatrix}$$

- F_{k+1} turns "shift" (S_{k+1}) into "phase" (P_{k+1}):

$$\hat{u}(\mathsf{F}_{k+1})\hat{u}(\mathsf{S}_{k+1}) \quad = \quad \hat{u}(\mathsf{P}_{k+1})\hat{u}(\mathsf{F}_{k+1})$$

Mode Fourier Transform

- Fourier transform of modes $0 \ldots k$: Define $\omega = e^{i2\pi/(k+1)}$.

$$\hat{u}(\mathsf{F}_{k+1}) = \frac{1}{\sqrt{k+1}} \begin{pmatrix} 1 & 1 & 1 & \ldots & 1 \\ 1 & \omega & \omega^2 & \ldots & \omega^k \\ 1 & \omega^2 & \omega^{2*2} & \ldots & \omega^{k*2} \\ \vdots & & & \ddots & \vdots \\ 1 & \omega^k & \omega^{k*2} & \ldots & \omega^{k*k} \end{pmatrix}$$

- F_{k+1} turns "shift" (S_{k+1}) into "phase" (P_{k+1}):

$$\hat{u}(\mathsf{F}_{k+1}) \begin{pmatrix} 0 & 0 & \ldots & 0 & 1 \\ 1 & 0 & \ldots & 0 & 0 \\ 0 & 1 & \ldots & 0 & 0 \\ \vdots & & \ddots & \vdots & \\ 0 & 0 & \ldots & 1 & 0 \end{pmatrix} = \begin{pmatrix} 1 & 0 & 0 & \ldots & 0 \\ 0 & \omega & 0 & \ldots & 0 \\ 0 & 0 & \omega^2 & \ldots & 0 \\ \vdots & & & \ddots & \vdots \\ 0 & 0 & 0 & \ldots & \omega^k \end{pmatrix} \hat{u}(\mathsf{F}_{k+1})$$

Back to: Tel_k network

Tel_k State Preparation Algorithm

- Ts_k is a bosonic qubit state:

$$\mathsf{Ts}_k = \frac{1}{\sqrt{k+1}} \sum_{i=0}^{k} |1\rangle^i |0\rangle^{k-i} |0\rangle^i |1\rangle^{k-i}$$

Tel_k State Preparation Algorithm

- Ts_k is a bosonic qubit state:

$$\begin{aligned}\mathsf{Ts}_k &= \frac{1}{\sqrt{k+1}}\sum_{i=0}^{k}|1\rangle^i|0\rangle^{k-i}|0\rangle^i|1\rangle^{k-i}\\ &= \frac{1}{\sqrt{k+1}}\sum_{i=0}^{k}|\mathsf{o}\rangle^i|\mathsf{1}\rangle^{k-i}\end{aligned}$$

Tel_k State Preparation Algorithm

- Ts_2 is a bosonic qubit state: $\mathsf{Ts}_2 = \frac{1}{\sqrt{3}}\left(|\mathtt{1}\rangle_{3,1}|\mathtt{1}\rangle_{4,2} + |\mathtt{0}\rangle_{3,1}|\mathtt{1}\rangle_{4,2} + |\mathtt{0}\rangle_{3,1}|\mathtt{0}\rangle_{4,2}\right)$.

Tel_k State Preparation Algorithm

- Ts_2 is a bosonic qubit state: $\mathrm{Ts}_2 = \frac{1}{\sqrt{3}}\left(|1\rangle_{3,1}|1\rangle_{4,2} + |0\rangle_{3,1}|1\rangle_{4,2} + |0\rangle_{3,1}|0\rangle_{4,2}\right)$.

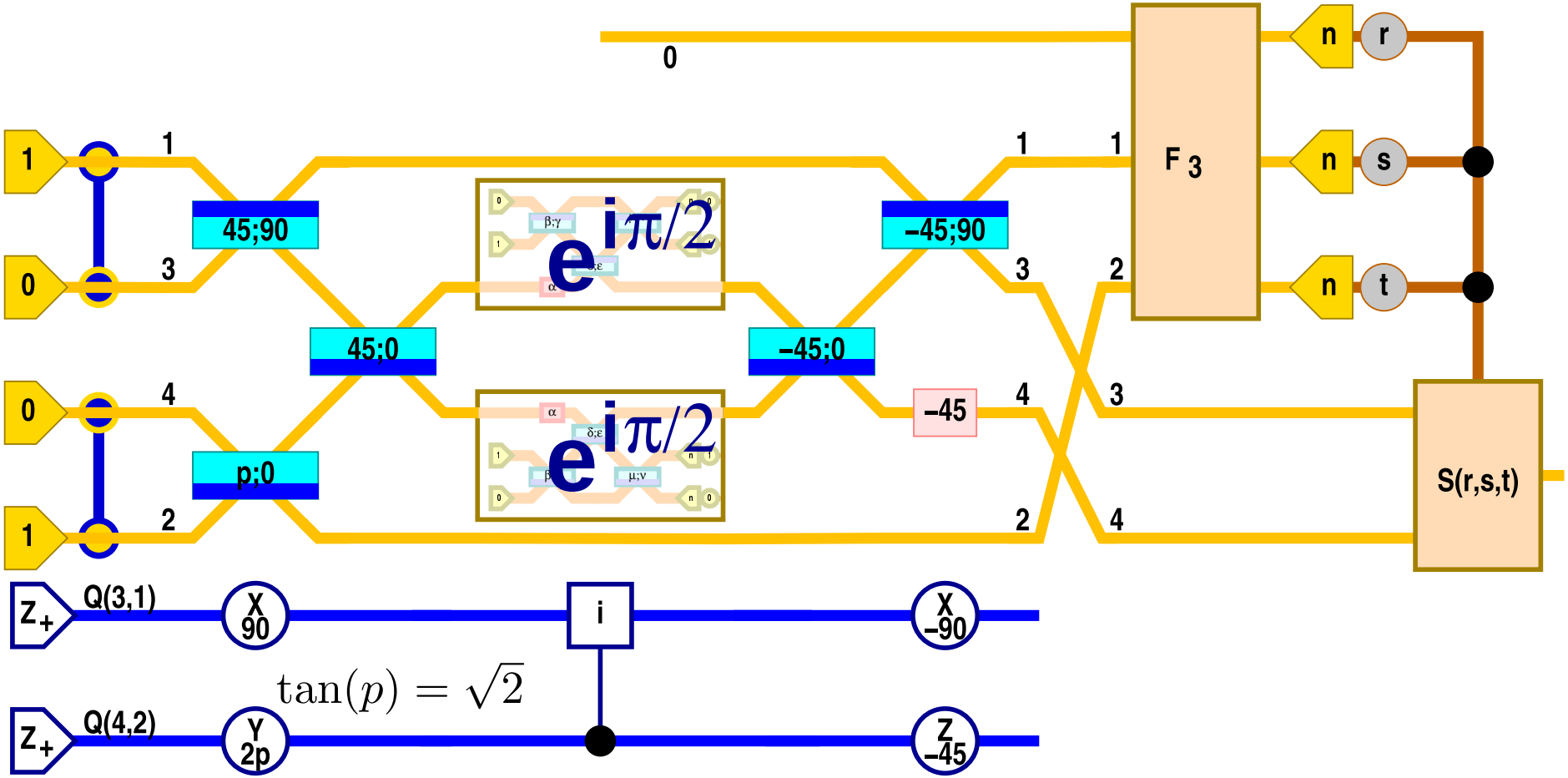

Conditional Sign Flip with Probability $4/9$

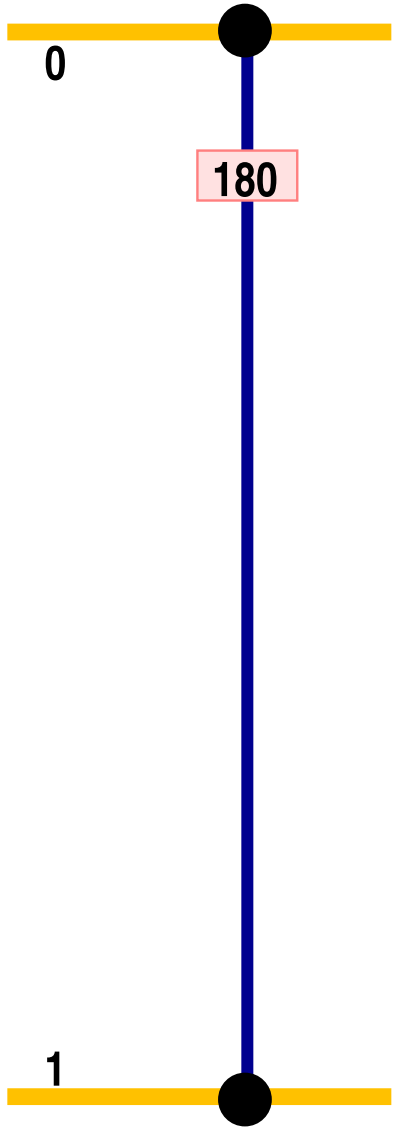

Conditional Sign Flip with Probability $4/9$

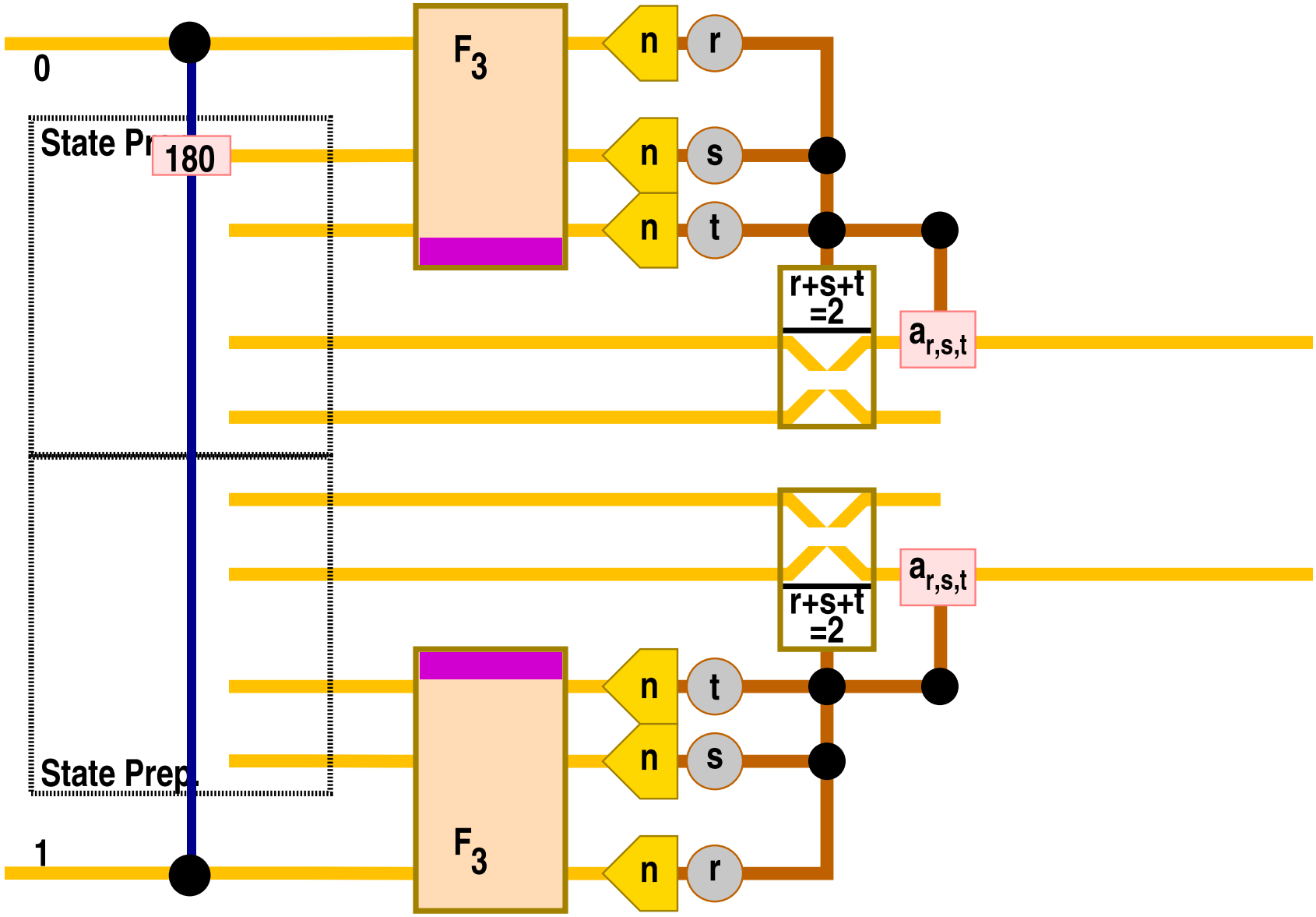

Conditional Sign Flip with Probability $4/9$

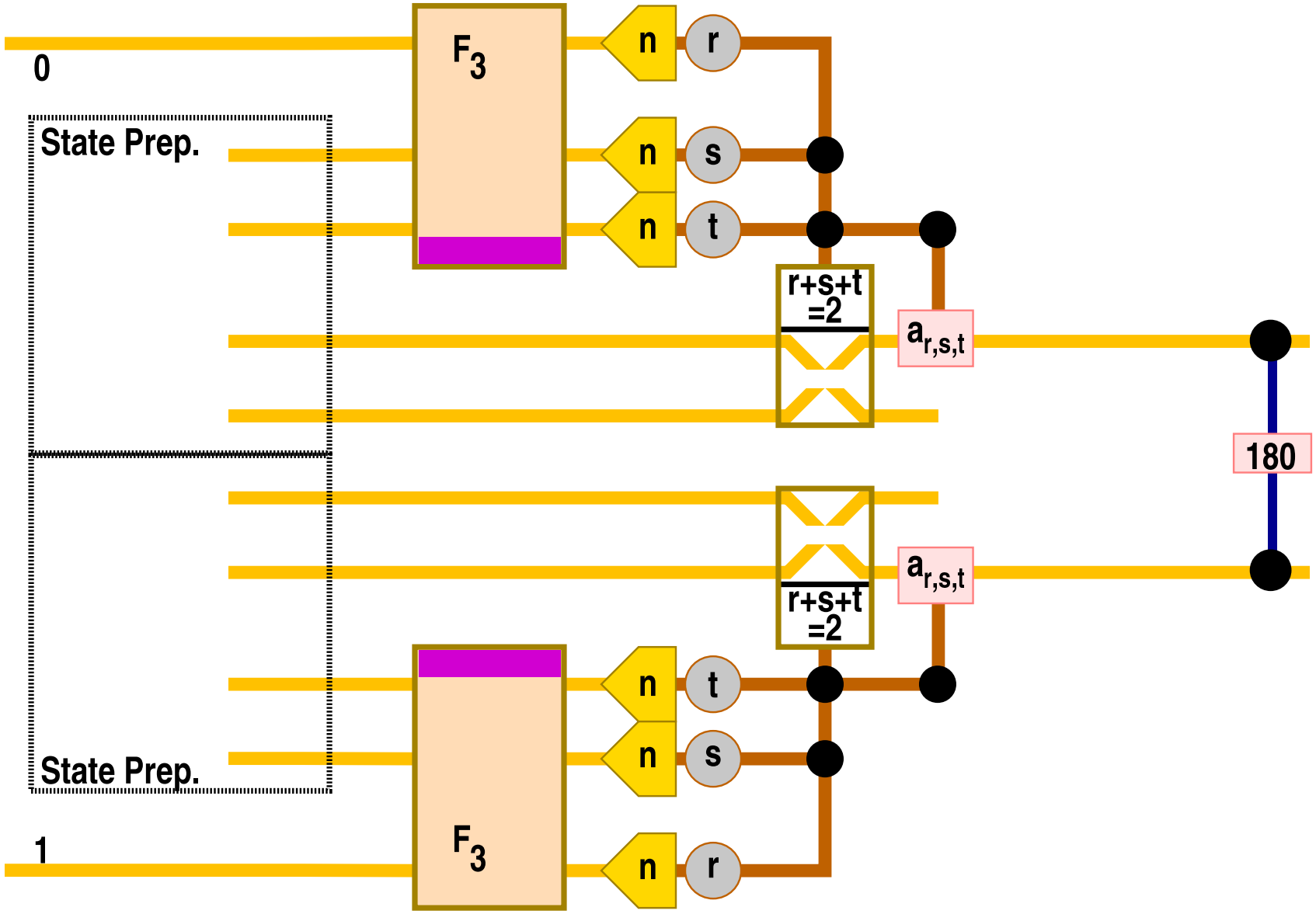

Conditional Sign Flip with Probability $4/9$

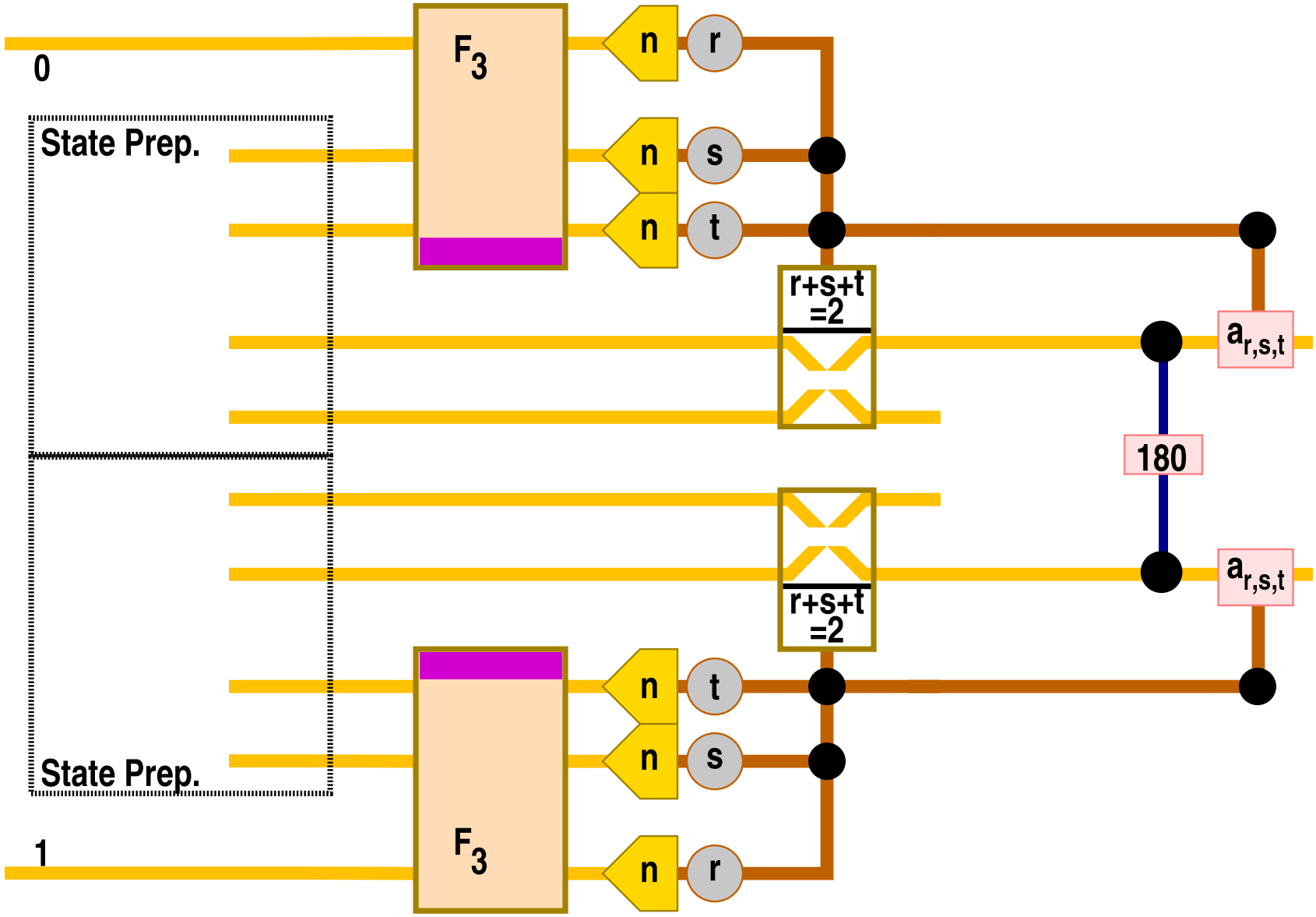

Conditional Sign Flip with Probability $4/9$

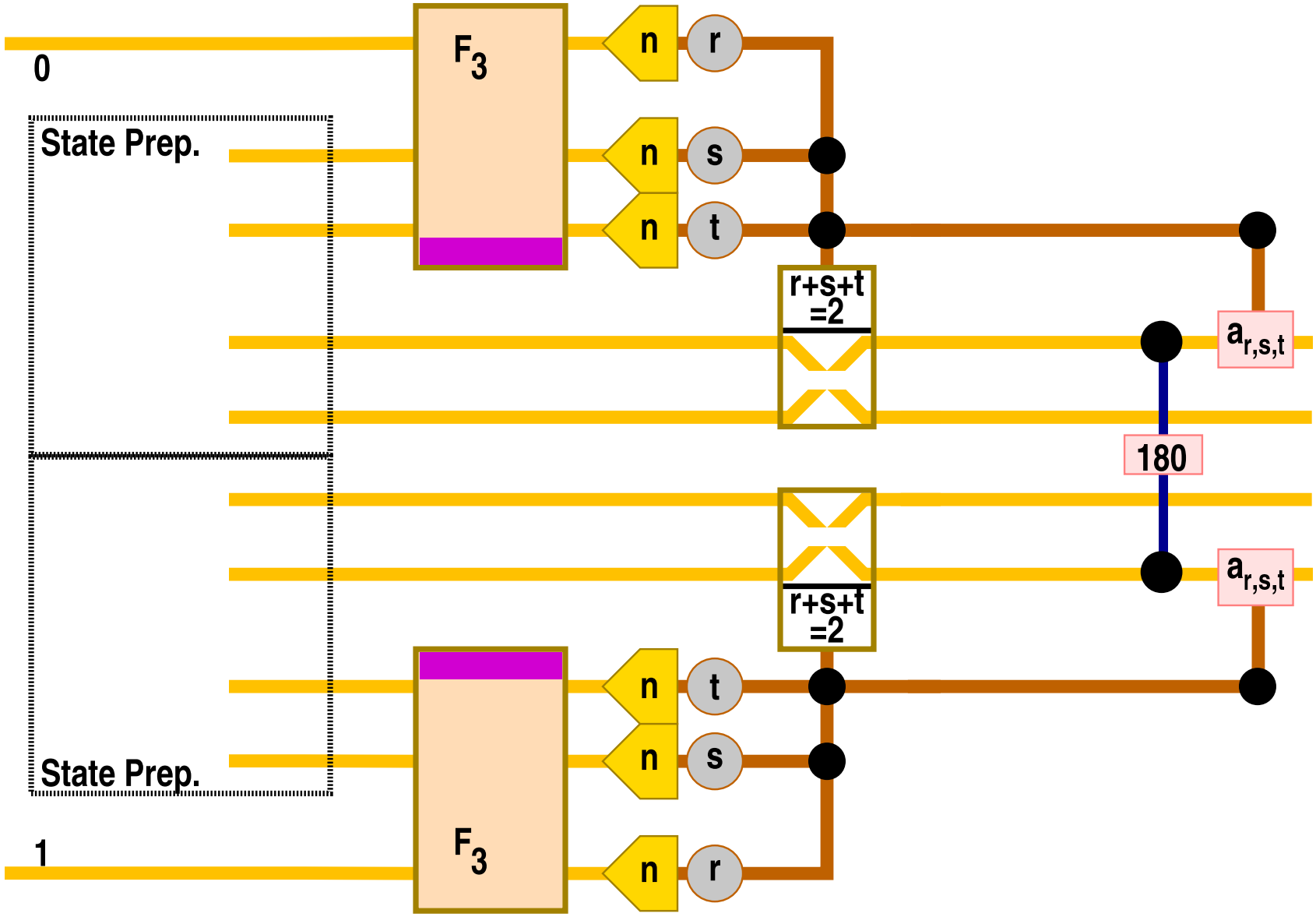

Conditional Sign Flip with Probability $4/9$

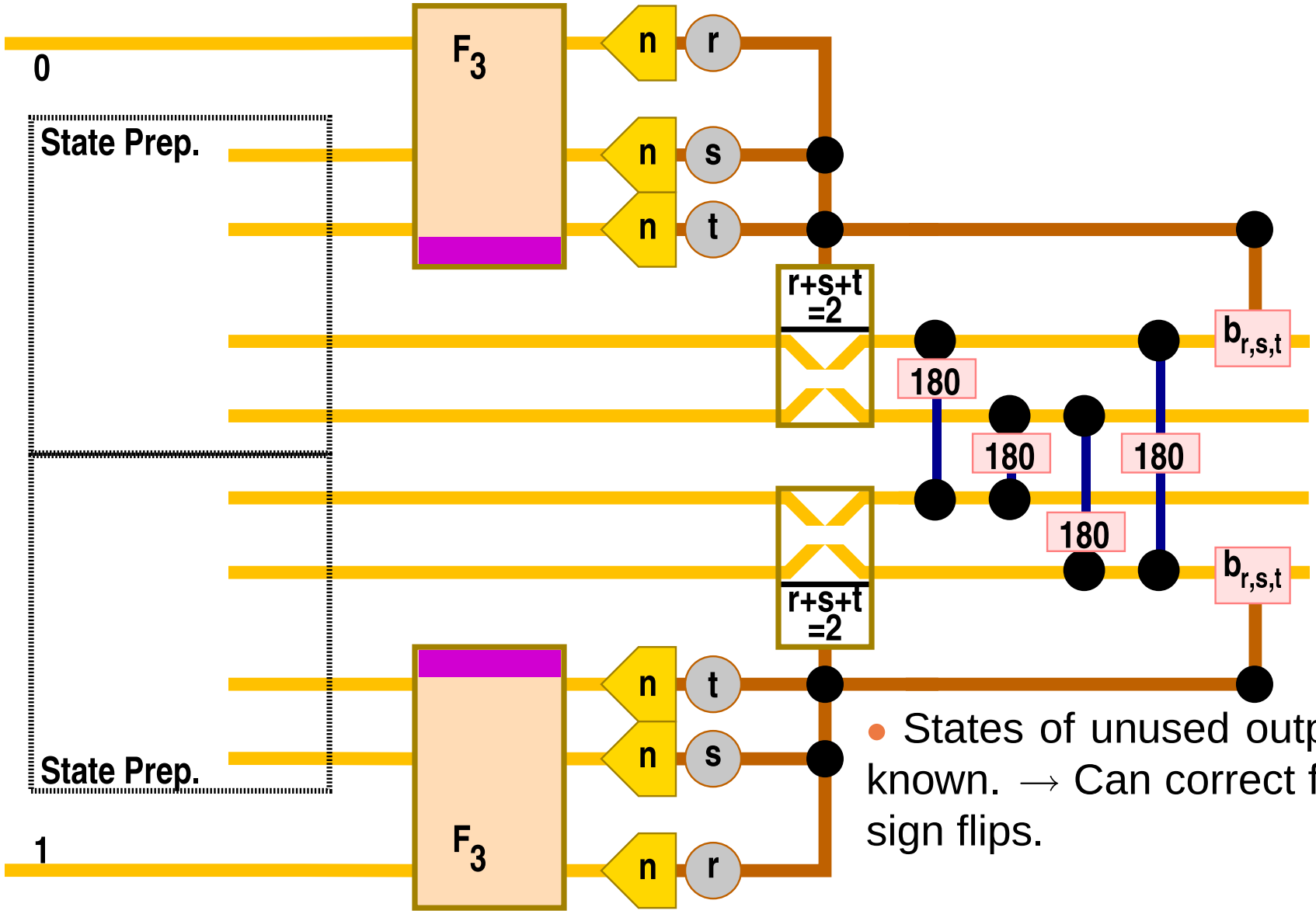

- States of unused outputs are known. → Can correct for extra sign flips.

Conditional Sign Flip with Probability $4/9$

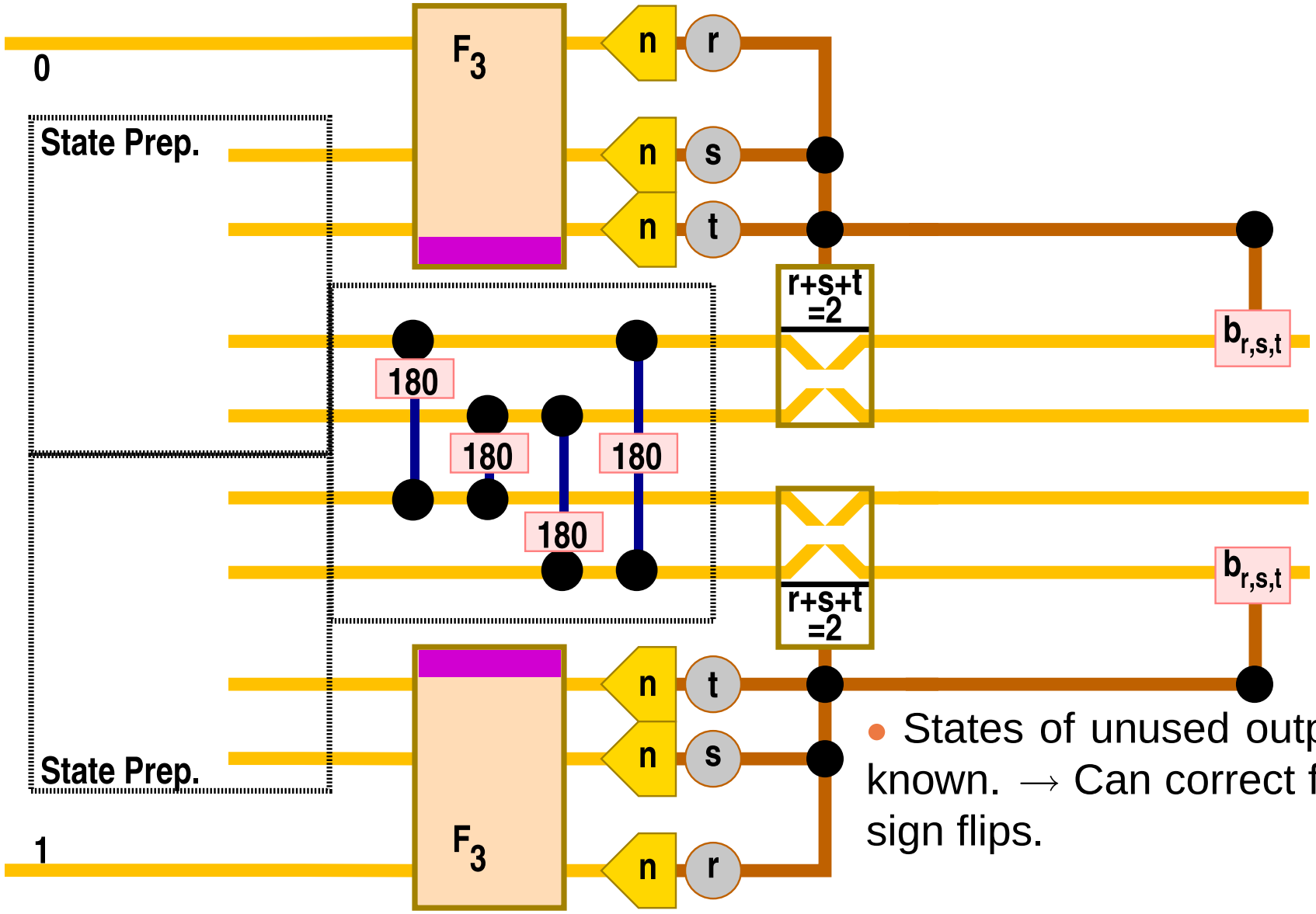

- States of unused outputs are known. → Can correct for extra sign flips.

Back to: Guide

State Preparations for CS$_{k^2/(k+1)^2}$

- Design qubit networks and translate.

State Preparations for CS$_{k^2/(k+1)^2}$

- Design qubit networks and translate.

  Example: Prepare Cs_2.

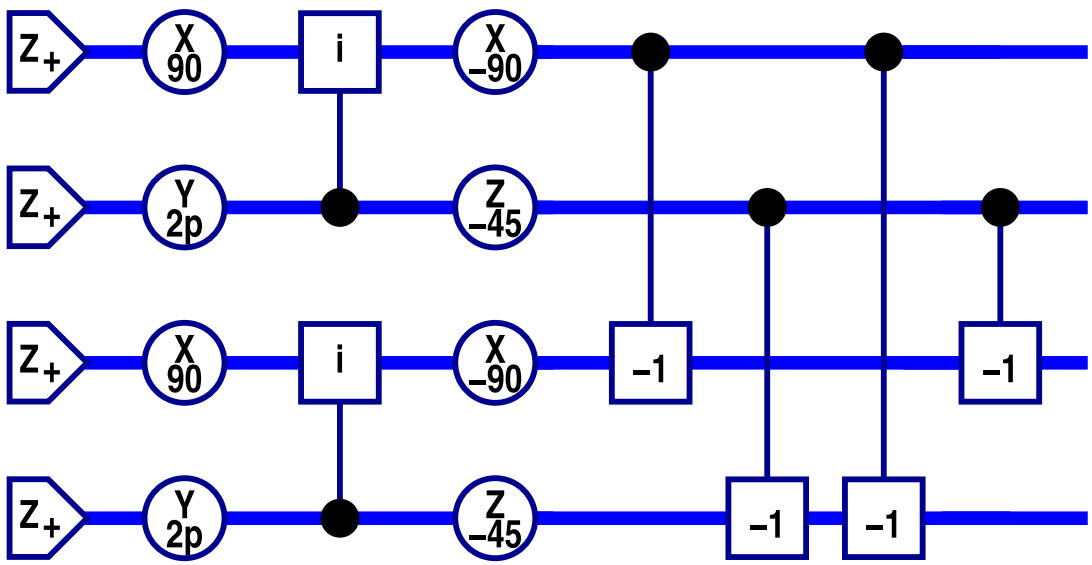

State Preparations for CS$_{k^2/(k+1)^2}$

- Design qubit networks and translate.

  Example: Prepare Cs_2.

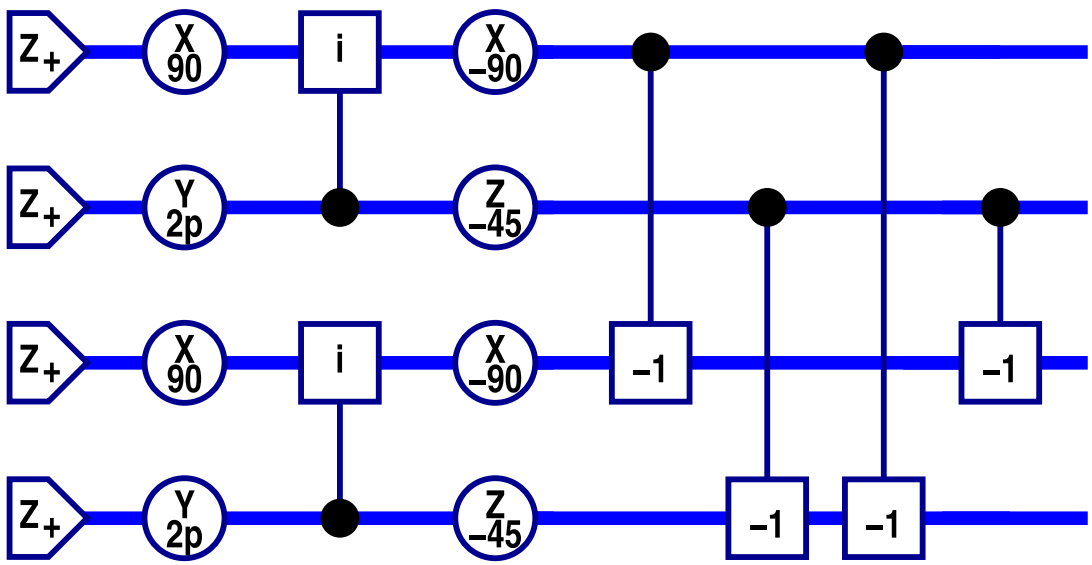

- Requires 6 postselected controlled gates.

State Preparations for $\mathrm{CS}_{k^2/(k+1)^2}$

- Design qubit networks and translate.

  Example: Prepare Cs_2.

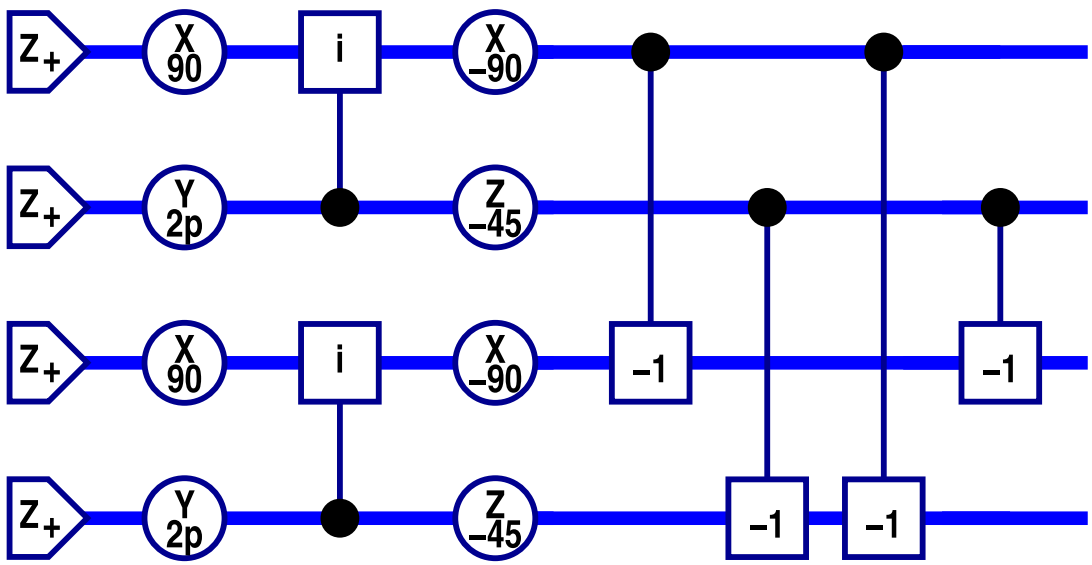

- Requires 6 postselected controlled gates.
  - As shown: Expected number of gate attempts $\gg 600000$.
  - Can be improved but asymptotically still bad.

    Knill&Laflamme&Milburn 2000 [18]
  - Issue will be avoided by coding.

Back to: Guide

Failure Behavior of the Teleportation Schemes

- Tel_1:

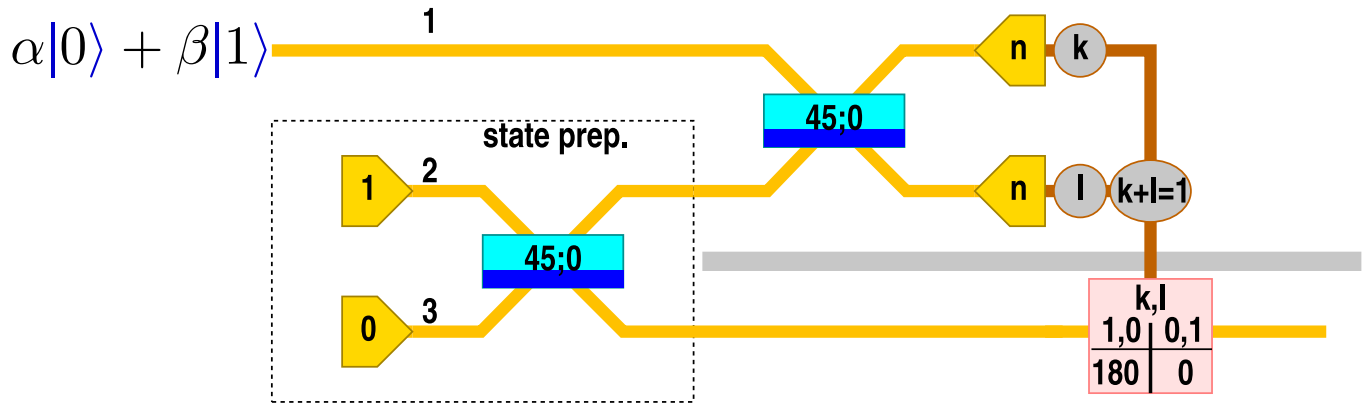

Failure Behavior of the Teleportation Schemes

- Tel_1: $\alpha|0\rangle + \beta|1\rangle$

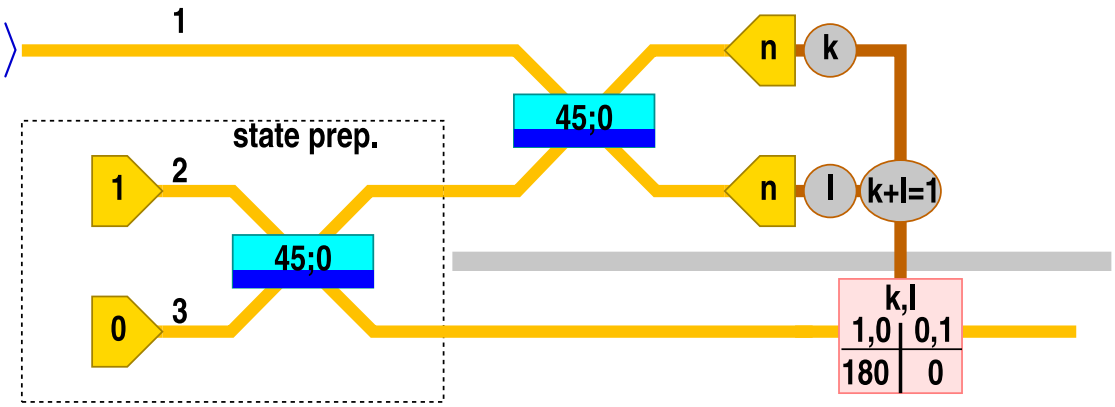

  - $k + l = 0$: Input was $|0\rangle$.

Failure Behavior of the Teleportation Schemes

- Tel_1:

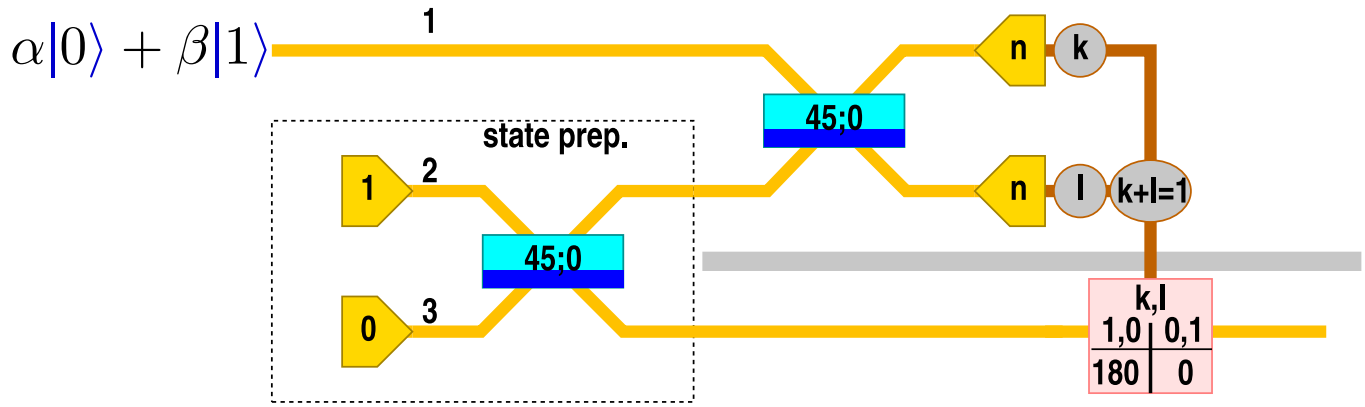

  - $k + l = 0$: Input was $|0\rangle$.
  - $k + l = 2$: Input was $|1\rangle$.

Failure Behavior of the Teleportation Schemes

- Tel_1:

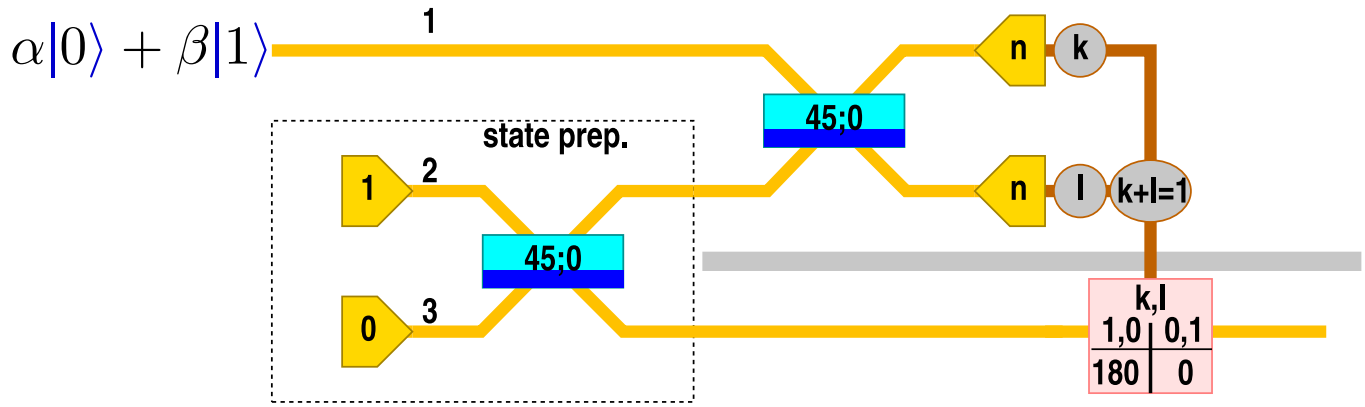

  - $k + l = 0$: Input was $|0\rangle$.
  - $k + l = 2$: Input was $|1\rangle$.

  - Failure of Tel_1 is measurement of $|0\rangle$ vs. $|1\rangle$. Probability of $\mathbf{n}$-measurement error: $1/2$.

Failure Behavior of the Teleportation Schemes

- Tel$_1$: $\alpha|0\rangle + \beta|1\rangle$

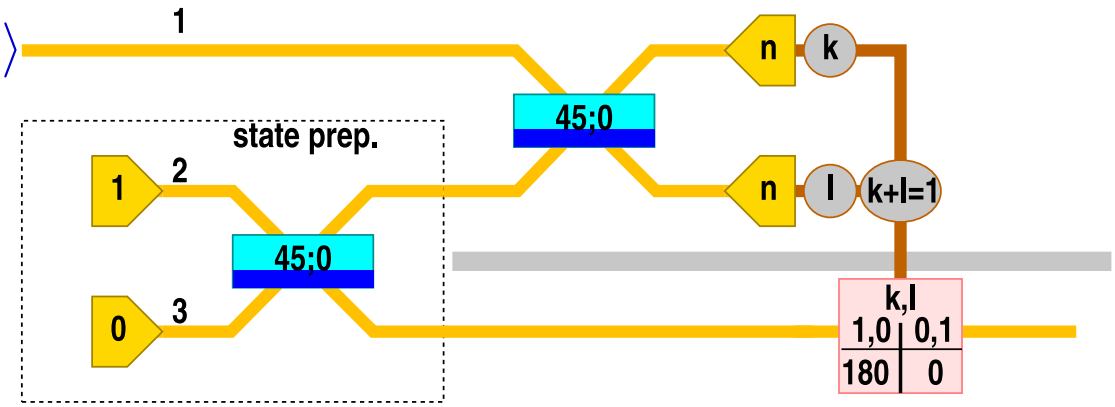

  - $k + l = 0$: Input was $|0\rangle$.
  - $k + l = 2$: Input was $|1\rangle$.
  - Failure of Tel$_1$ is measurement of $|0\rangle$ vs. $|1\rangle$.
    Probability of $\mathbf{n}$-measurement error: $1/2$.

- Generalization to Tel$_k$: Def: $p =$ number of photons detected.
  - $p = 0$: Input was $|0\rangle$. $p = k + 1$: Input was $|1\rangle$.
  - Failure of Tel$_k$ is measurement of $|0\rangle$ vs. $|1\rangle$.
    Probability of $\mathbf{n}$-measurement error: $1/(k + 1)$.

Forward to: $\mathcal{X}_2$

Failure Model for Ideal eLOQC Gates

- Detected Z-meas. error models:

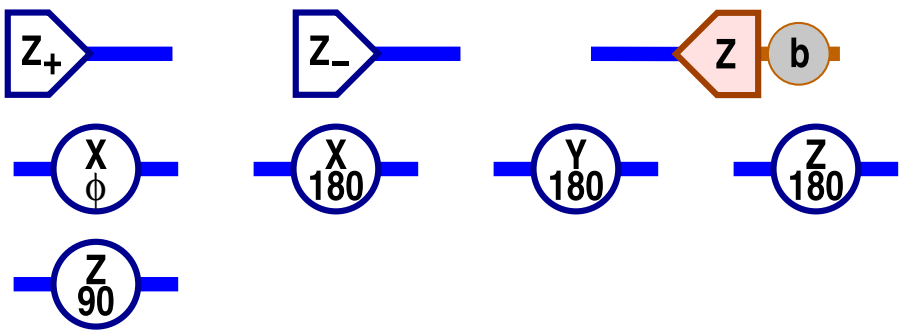

Physical	Encoded
No error	
No error	
No error	

$$X = \sigma_x = \begin{pmatrix} 0 & 1 \\ 1 & 0 \end{pmatrix}, \quad Y = \sigma_y = \begin{pmatrix} 0 & -i \\ i & 0 \end{pmatrix}, \quad Z = \sigma_z = \begin{pmatrix} 1 & 0 \\ 0 & -1 \end{pmatrix}$$

$$(X)_{90^\circ} = e^{-i\sigma_x \pi/4}$$

$$(ZZ)_{90^\circ} = e^{-i(\sigma_z)_1(\sigma_z)_2 \pi/4}$$

Failure Model for Ideal eLOQC Gates

- Detected Z-meas. error models:

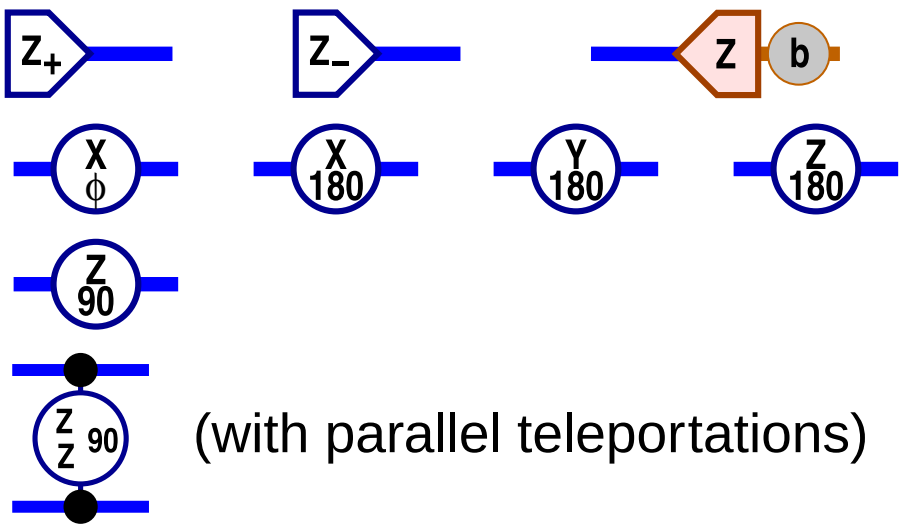

(with parallel teleportations)

Physical	Encoded
No error	
No error	
No error	
, prob. f	
indep.	
, prob. f	

$$X = \sigma_x = \begin{pmatrix} 0 & 1 \\ 1 & 0 \end{pmatrix}, \quad Y = \sigma_y = \begin{pmatrix} 0 & -i \\ i & 0 \end{pmatrix}, \quad Z = \sigma_z = \begin{pmatrix} 1 & 0 \\ 0 & -1 \end{pmatrix}$$

$$(X)_{90^\circ} = e^{-i\sigma_x \pi/4}$$

$$(ZZ)_{90^\circ} = e^{-i\left(\sigma_z\right)_1 \left(\sigma_z\right)_2 \pi/4}$$

Failure Model for Ideal eLOQC Gates

- Detected Z-meas. error models:

	Physical	Encoded
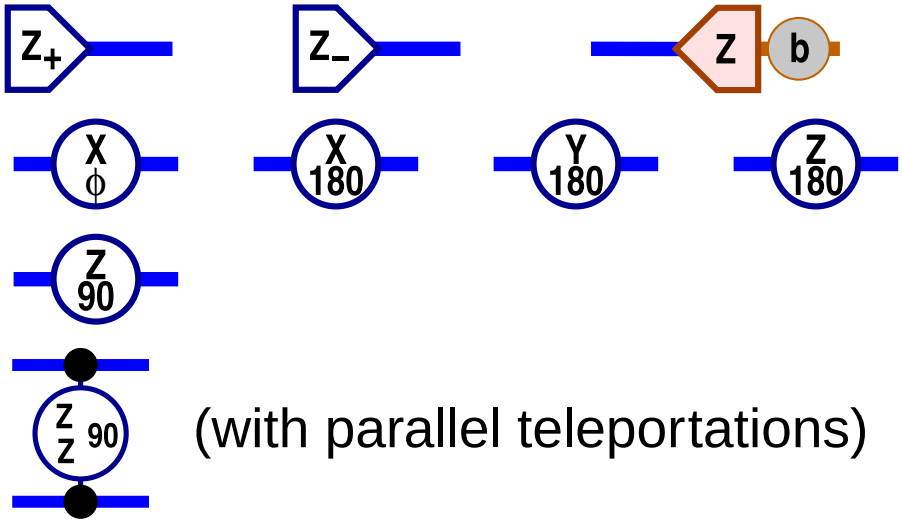 (with parallel teleportations)	No error No error No error indep. { Z, prob. f ; Z, prob. f }	
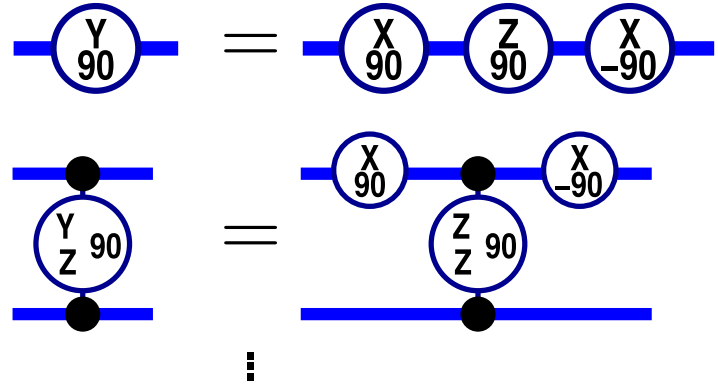	No error indep. { Y, prob. f ; Z, prob. f }	

Failure Model for Ideal eLOQC Gates

- Detected Z-meas. error models:

	Physical	Encoded
	No error	No error
	No error	No error
	No error	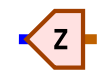 , prob. f
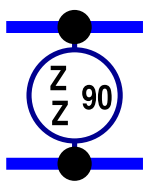 (with parallel teleportations)	, prob. f indep. , prob. f	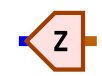 , prob. f indep. 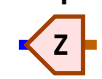 , prob. f
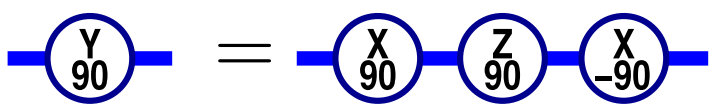	No error	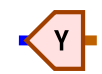 , prob. f
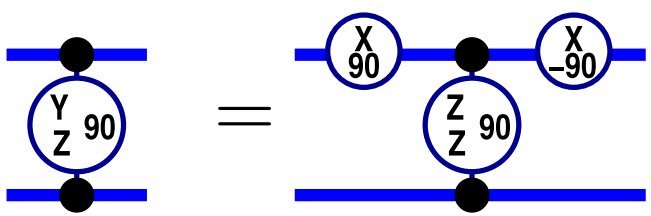	, prob. f indep. , prob. f	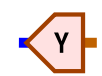 , prob. f indep. 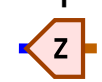 , prob. f

Failure Model for Ideal eLOQC Gates

- Detected Z-meas. error models:

	Physical	Encoded
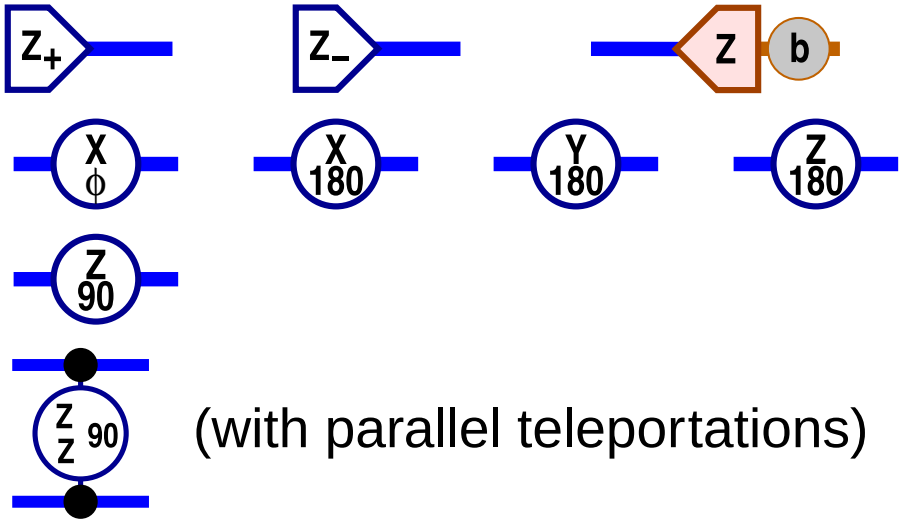 (with parallel teleportations)	No error No error No error {indep. Z, prob. f; Z, prob. f}	No error No error Z, prob. f {indep. Z, prob. f; Z, prob. f}
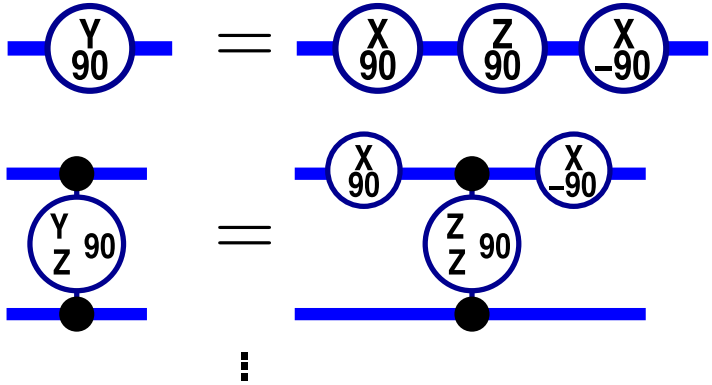	No error {indep. Y, prob. f; Z, prob. f}	Y, prob. f {indep. Y, prob. f; Z, prob. f}

- Measurement errors can be assumed to follow the operation.

A Two-Qubit Code: $\mathcal{X}_2$

- $\mathcal{X}_2$'s logical states:

$$|0\rangle_{\mathsf{L}(1,2)} = \frac{1}{\sqrt{2}}\big(|00\rangle_{12} + |11\rangle_{12}\big), \quad |1\rangle_{\mathsf{L}(1,2)} = \frac{1}{\sqrt{2}}\big(|01\rangle_{12} + |10\rangle_{12}\big)$$

A Two-Qubit Code: $\mathcal{X}_2$

- $\mathcal{X}_2$'s logical states:

  $|0\rangle_{\mathsf{L}(1,2)} = \frac{1}{\sqrt{2}}\big(|00\rangle_{12} + |11\rangle_{12}\big), \quad |1\rangle_{\mathsf{L}(1,2)} = \frac{1}{\sqrt{2}}\big(|01\rangle_{12} + |10\rangle_{12}\big)$

- Effects on states, by example:

  $\alpha|0\rangle_{\mathsf{L}}$

  $+$

  $\beta|1\rangle_{\mathsf{L}}$

A Two-Qubit Code: $\mathcal{X}_2$

- $\mathcal{X}_2$'s logical states:

$$|0\rangle_{\mathsf{L}(1,2)} = \frac{1}{\sqrt{2}}\big(|00\rangle_{12} + |11\rangle_{12}\big), \quad |1\rangle_{\mathsf{L}(1,2)} = \frac{1}{\sqrt{2}}\big(|01\rangle_{12} + |10\rangle_{12}\big)$$

- Effects on states, by example:

$$\begin{array}{lcl} \alpha|0\rangle_{\mathsf{L}} & & \frac{\alpha}{\sqrt{2}}\big(|00\rangle + |11\rangle\big) \\ + & = & + \\ \beta|1\rangle_{\mathsf{L}} & & \frac{\beta}{\sqrt{2}}\big(|01\rangle + |10\rangle\big) \end{array}$$

A Two-Qubit Code: $\mathcal{X}_2$

- $\mathcal{X}_2$'s logical states:

$$|0\rangle_{\mathsf{L}(1,2)} = \frac{1}{\sqrt{2}}\big(|00\rangle_{12} + |11\rangle_{12}\big), \quad |1\rangle_{\mathsf{L}(1,2)} = \frac{1}{\sqrt{2}}\big(|01\rangle_{12} + |10\rangle_{12}\big)$$

- Effects on states, by example:

$$\left.\begin{array}{lcl} \alpha|0\rangle_{\mathsf{L}} & & \frac{\alpha}{\sqrt{2}}\big(|00\rangle + |11\rangle\big) \\ + & = & + \\ \beta|1\rangle_{\mathsf{L}} & & \frac{\beta}{\sqrt{2}}\big(|01\rangle + |10\rangle\big) \end{array}\right\} \xrightarrow{P_{0*}} \left\{\begin{array}{c} \alpha|00\rangle \\ + \\ \beta|01\rangle \end{array}\right\}$$

A Two-Qubit Code: $\mathcal{X}_2$

- $\mathcal{X}_2$'s logical states:

$$|0\rangle_{\mathsf{L}(1,2)} = \frac{1}{\sqrt{2}}\big(|00\rangle_{12} + |11\rangle_{12}\big), \quad |1\rangle_{\mathsf{L}(1,2)} = \frac{1}{\sqrt{2}}\big(|01\rangle_{12} + |10\rangle_{12}\big)$$

- Effects on states, by example:

$$\left.\begin{array}{lcl} \alpha|0\rangle_{\mathsf{L}} & & \frac{\alpha}{\sqrt{2}}\big(|00\rangle + |11\rangle\big) \\ + & = & + \\ \beta|1\rangle_{\mathsf{L}} & & \frac{\beta}{\sqrt{2}}\big(|01\rangle + |10\rangle\big) \end{array}\right\} \xrightarrow{P_{0*}} \left\{\begin{array}{l} \alpha|00\rangle \\ + \\ \beta|01\rangle \end{array}\right\} \xrightarrow{U_{0*}} \left\{\begin{array}{l} \alpha|0\rangle_{\mathsf{L}} \\ + \\ \beta|1\rangle_{\mathsf{L}} \end{array}\right.$$

A Two-Qubit Code: $\mathcal{X}_2$

- $\mathcal{X}_2$'s logical states:

$$|0\rangle_{\mathsf{L}(1,2)} = \frac{1}{\sqrt{2}}\big(|00\rangle_{12} + |11\rangle_{12}\big), \quad |1\rangle_{\mathsf{L}(1,2)} = \frac{1}{\sqrt{2}}\big(|01\rangle_{12} + |10\rangle_{12}\big)$$

- Effects on states, by example:

$$\left.\begin{array}{lcl} \alpha|0\rangle_{\mathsf{L}} & & \frac{\alpha}{\sqrt{2}}\big(|00\rangle + |11\rangle\big) \\ + & = & + \\ \beta|1\rangle_{\mathsf{L}} & & \frac{\beta}{\sqrt{2}}\big(|01\rangle + |10\rangle\big) \end{array}\right\} \xrightarrow{P_{0*}} \left\{\begin{array}{l} \alpha|00\rangle \\ + \\ \beta|01\rangle \end{array}\right\} \xrightarrow{U_{0*}} \left\{\begin{array}{l} \alpha|0\rangle_{\mathsf{L}} \\ + \\ \beta|1\rangle_{\mathsf{L}} \end{array}\right.$$

$$\xrightarrow{P_{*1}} \left\{\begin{array}{l} \alpha|11\rangle \\ + \\ \beta|01\rangle \end{array}\right\}$$

A Two-Qubit Code: $\mathcal{X}_2$

- $\mathcal{X}_2$'s logical states:

$$|0\rangle_{\mathsf{L}(1,2)} = \frac{1}{\sqrt{2}}\big(|00\rangle_{12} + |11\rangle_{12}\big), \quad |1\rangle_{\mathsf{L}(1,2)} = \frac{1}{\sqrt{2}}\big(|01\rangle_{12} + |10\rangle_{12}\big)$$

- Effects on states, by example:

$$\left.\begin{array}{lcl} \alpha|0\rangle_{\mathsf{L}} & & \frac{\alpha}{\sqrt{2}}\big(|00\rangle + |11\rangle\big) \\ + & = & + \\ \beta|1\rangle_{\mathsf{L}} & & \frac{\beta}{\sqrt{2}}\big(|01\rangle + |10\rangle\big) \end{array}\right\} \xrightarrow{P_{0*}} \left\{\begin{array}{c} \alpha|00\rangle \\ + \\ \beta|01\rangle \end{array}\right\} \xrightarrow{U_{0*}} \left\{\begin{array}{c} \alpha|0\rangle_{\mathsf{L}} \\ + \\ \beta|1\rangle_{\mathsf{L}} \end{array}\right.$$

$$\xrightarrow{P_{*1}} \left\{\begin{array}{c} \alpha|11\rangle \\ + \\ \beta|01\rangle \end{array}\right\} \xrightarrow{U_{*1}} \left\{\begin{array}{c} \alpha|0\rangle_{\mathsf{L}} \\ + \\ \beta|1\rangle_{\mathsf{L}} \end{array}\right.$$

A Two-Qubit Code: $\mathcal{X}_2$

- $\mathcal{X}_2$'s logical states:

$$|0\rangle_{\mathsf{L}(1,2)} = \frac{1}{\sqrt{2}}\big(|00\rangle_{12} + |11\rangle_{12}\big), \quad |1\rangle_{\mathsf{L}(1,2)} = \frac{1}{\sqrt{2}}\big(|01\rangle_{12} + |10\rangle_{12}\big)$$

- Effects on states, by example:

$$\left.\begin{array}{lcl} \alpha|0\rangle_{\mathsf{L}} & & \frac{\alpha}{\sqrt{2}}\big(|00\rangle + |11\rangle\big) \\ + & = & + \\ \beta|1\rangle_{\mathsf{L}} & & \frac{\beta}{\sqrt{2}}\big(|01\rangle + |10\rangle\big) \end{array}\right\} \xrightarrow{P_{0*}} \left\{\begin{array}{l} \alpha|00\rangle \\ + \\ \beta|01\rangle \end{array}\right\} \xrightarrow{U_{0*}} \left\{\begin{array}{l} \alpha|0\rangle_{\mathsf{L}} \\ + \\ \beta|1\rangle_{\mathsf{L}} \end{array}\right.$$

$$\xrightarrow{P_{*1}} \left\{\begin{array}{l} \alpha|11\rangle \\ + \\ \beta|01\rangle \end{array}\right\} \xrightarrow{U_{*1}} \left\{\begin{array}{l} \alpha|0\rangle_{\mathsf{L}} \\ + \\ \beta|1\rangle_{\mathsf{L}} \end{array}\right.$$

- Z-measurement errors can be corrected.

Forward to: $\mathcal{X}_2$ threshold

Encoded Operations for $\mathcal{X}_2$

- $\mathcal{X}_2$: $|0\rangle_{\mathsf{L}} = \frac{1}{\sqrt{2}}\big(|00\rangle + |11\rangle\big), |1\rangle_{\mathsf{L}} = \frac{1}{\sqrt{2}}\big(|01\rangle + |10\rangle\big)$
- The following hold when restricted to $\mathcal{X}_2$:

$$\begin{array}{lllll} (I)_{\mathsf{L}} & =_{\mathsf{L}} & II & =_{\mathsf{L}} & XX \\ (X)_{\mathsf{L}} & =_{\mathsf{L}} & XI & =_{\mathsf{L}} & IX \end{array} \qquad \begin{array}{lllll} (Z)_{\mathsf{L}} & =_{\mathsf{L}} & ZZ & =_{\mathsf{L}} & -YY \\ (Y)_{\mathsf{L}} & =_{\mathsf{L}} & YZ & =_{\mathsf{L}} & ZY \end{array}$$

Encoded Operations for $\mathcal{X}_2$

- $\mathcal{X}_2$: $|0\rangle_{\mathsf{L}} = \frac{1}{\sqrt{2}}\big(|00\rangle + |11\rangle\big), |1\rangle_{\mathsf{L}} = \frac{1}{\sqrt{2}}\big(|01\rangle + |10\rangle\big)$
- The following hold when restricted to $\mathcal{X}_2$:

$$\begin{aligned} (I)_{\mathsf{L}} &=_{\mathsf{L}} II =_{\mathsf{L}} XX & (Z)_{\mathsf{L}} &=_{\mathsf{L}} ZZ =_{\mathsf{L}} -YY \\ (X)_{\mathsf{L}} &=_{\mathsf{L}} XI =_{\mathsf{L}} IX & (Y)_{\mathsf{L}} &=_{\mathsf{L}} YZ =_{\mathsf{L}} ZY \end{aligned}$$

- Error-free encoded rotations:

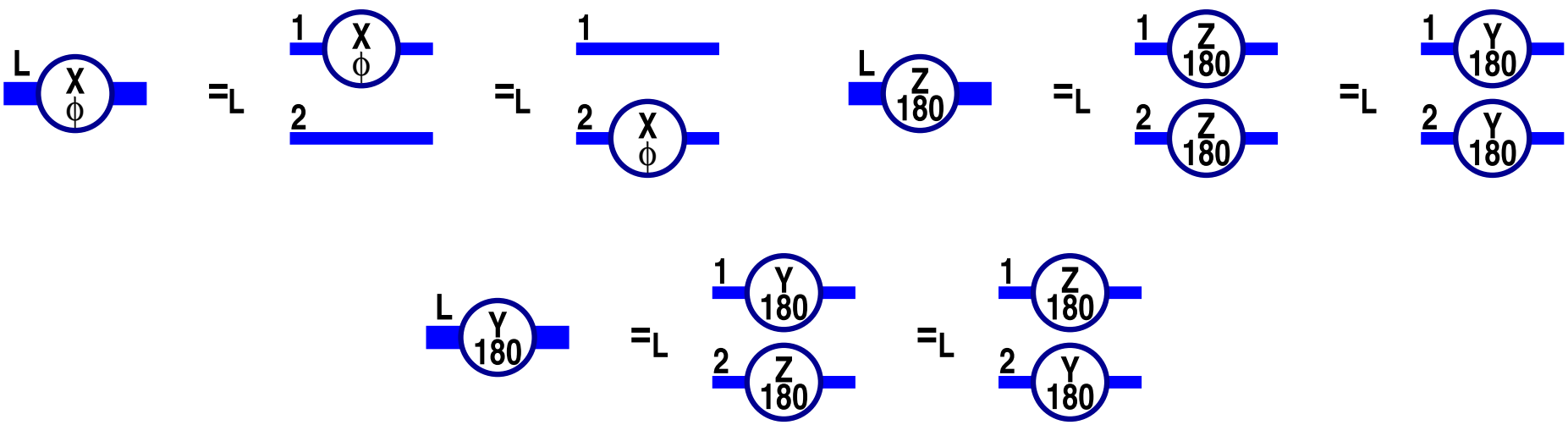

Forward to: $\mathcal{X}_2$'s recovery

Encoded Operations for $\mathcal{X}_2$

- $\mathcal{X}_2$: $|0\rangle_{\mathsf{L}} = \frac{1}{\sqrt{2}}\big(|00\rangle + |11\rangle\big), |1\rangle_{\mathsf{L}} = \frac{1}{\sqrt{2}}\big(|01\rangle + |10\rangle\big)$
- The following hold when restricted to $\mathcal{X}_2$:

$$\begin{aligned} (I)_{\mathsf{L}} &=_{\mathsf{L}} II =_{\mathsf{L}} XX & (Z)_{\mathsf{L}} &=_{\mathsf{L}} ZZ =_{\mathsf{L}} -YY \\ (X)_{\mathsf{L}} &=_{\mathsf{L}} XI =_{\mathsf{L}} IX & (Y)_{\mathsf{L}} &=_{\mathsf{L}} YZ =_{\mathsf{L}} ZY \end{aligned}$$

- Encoded state preparation, error-free if successful:

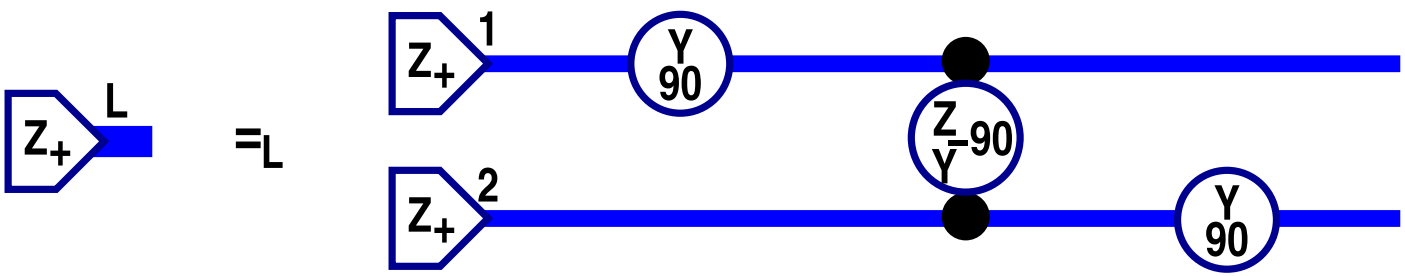

Forward to: $\mathcal{X}_2$'s recovery

Encoded Operations for $\mathcal{X}_2$

- $\mathcal{X}_2$: $|0\rangle_{\mathsf{L}} = \frac{1}{\sqrt{2}}\big(|00\rangle + |11\rangle\big), |1\rangle_{\mathsf{L}} = \frac{1}{\sqrt{2}}\big(|01\rangle + |10\rangle\big)$
- The following hold when restricted to $\mathcal{X}_2$:

$$\begin{aligned} (I)_{\mathsf{L}} &=_{\mathsf{L}} II =_{\mathsf{L}} XX & (Z)_{\mathsf{L}} &=_{\mathsf{L}} ZZ =_{\mathsf{L}} -YY \\ (X)_{\mathsf{L}} &=_{\mathsf{L}} XI =_{\mathsf{L}} IX & (Y)_{\mathsf{L}} &=_{\mathsf{L}} YZ =_{\mathsf{L}} ZY \end{aligned}$$

- Encoded measurements, error free:

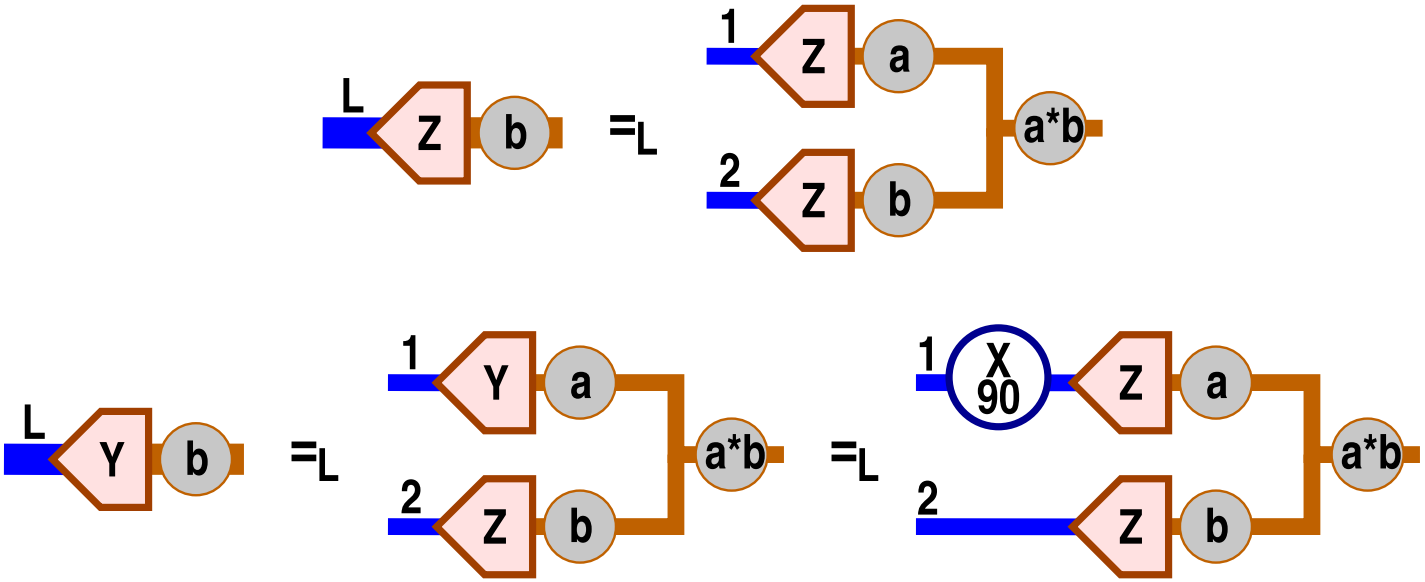

Forward to: $\mathcal{X}_2$'s recovery

Encoded Operations for $\mathcal{X}_2$

- $\mathcal{X}_2$: $|0\rangle_{\mathsf{L}} = \frac{1}{\sqrt{2}}\big(|00\rangle + |11\rangle\big), |1\rangle_{\mathsf{L}} = \frac{1}{\sqrt{2}}\big(|01\rangle + |10\rangle\big)$
- The following hold when restricted to $\mathcal{X}_2$:

$$\begin{aligned} (I)_{\mathsf{L}} &=_{\mathsf{L}} II =_{\mathsf{L}} XX & (Z)_{\mathsf{L}} &=_{\mathsf{L}} ZZ =_{\mathsf{L}} -YY \\ (X)_{\mathsf{L}} &=_{\mathsf{L}} XI =_{\mathsf{L}} IX & (Y)_{\mathsf{L}} &=_{\mathsf{L}} YZ =_{\mathsf{L}} ZY \end{aligned}$$

- Other encoded operations:
  - Logical Z_{90°:

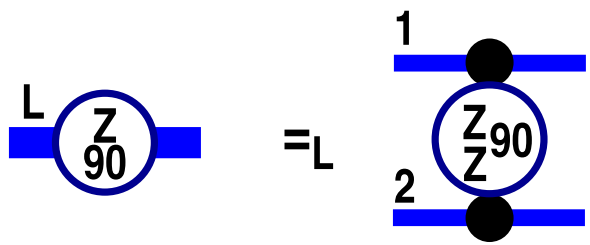

    - Measurement errors require recovery attempts.
  - Logical $(ZZ)_{90^\circ}$: By teleportation. In principle:

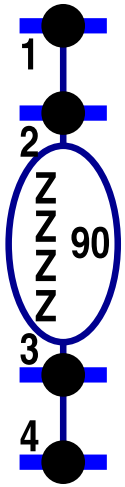

Recovery from Z-measurement Error

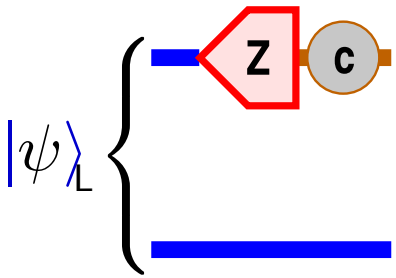

Recovery from Z-measurement Error

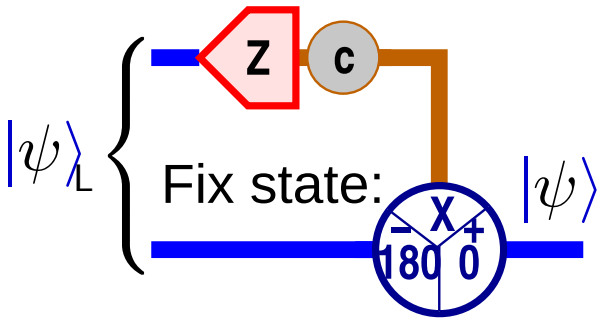

Recovery from Z-measurement Error

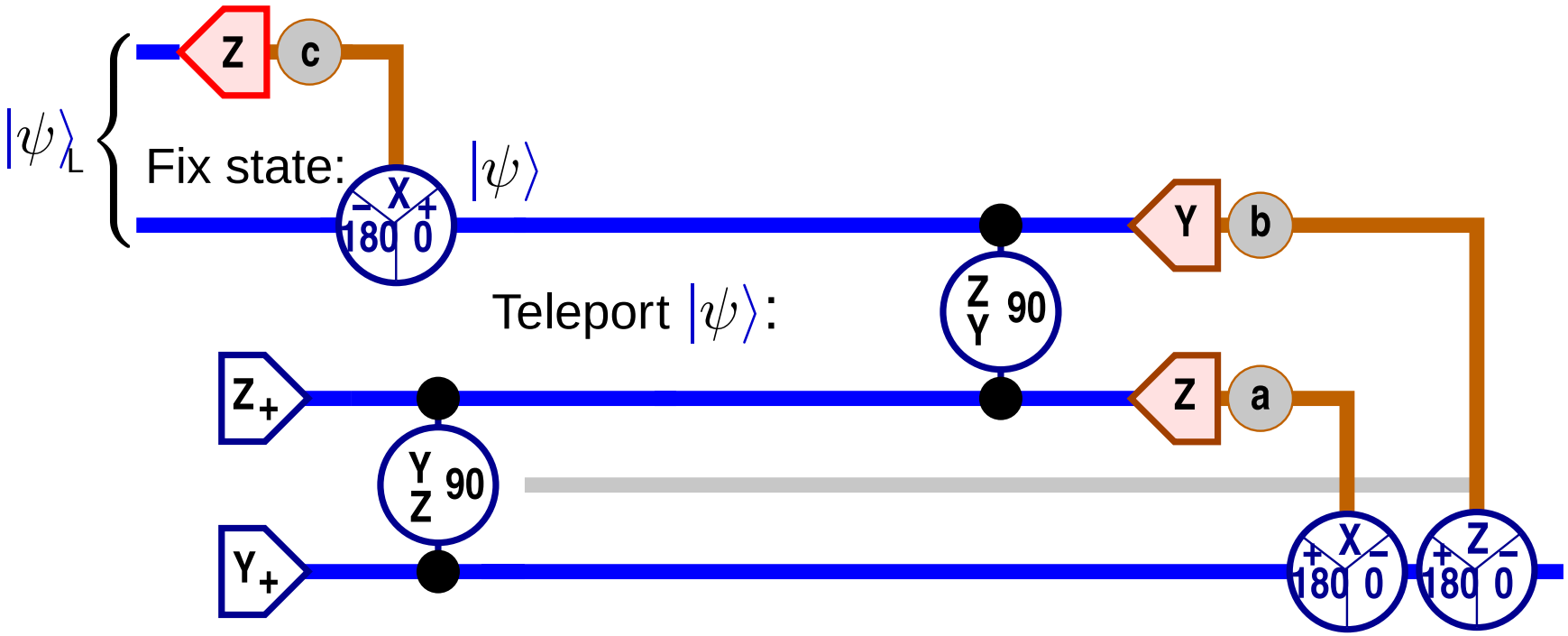

Recovery from Z-measurement Error

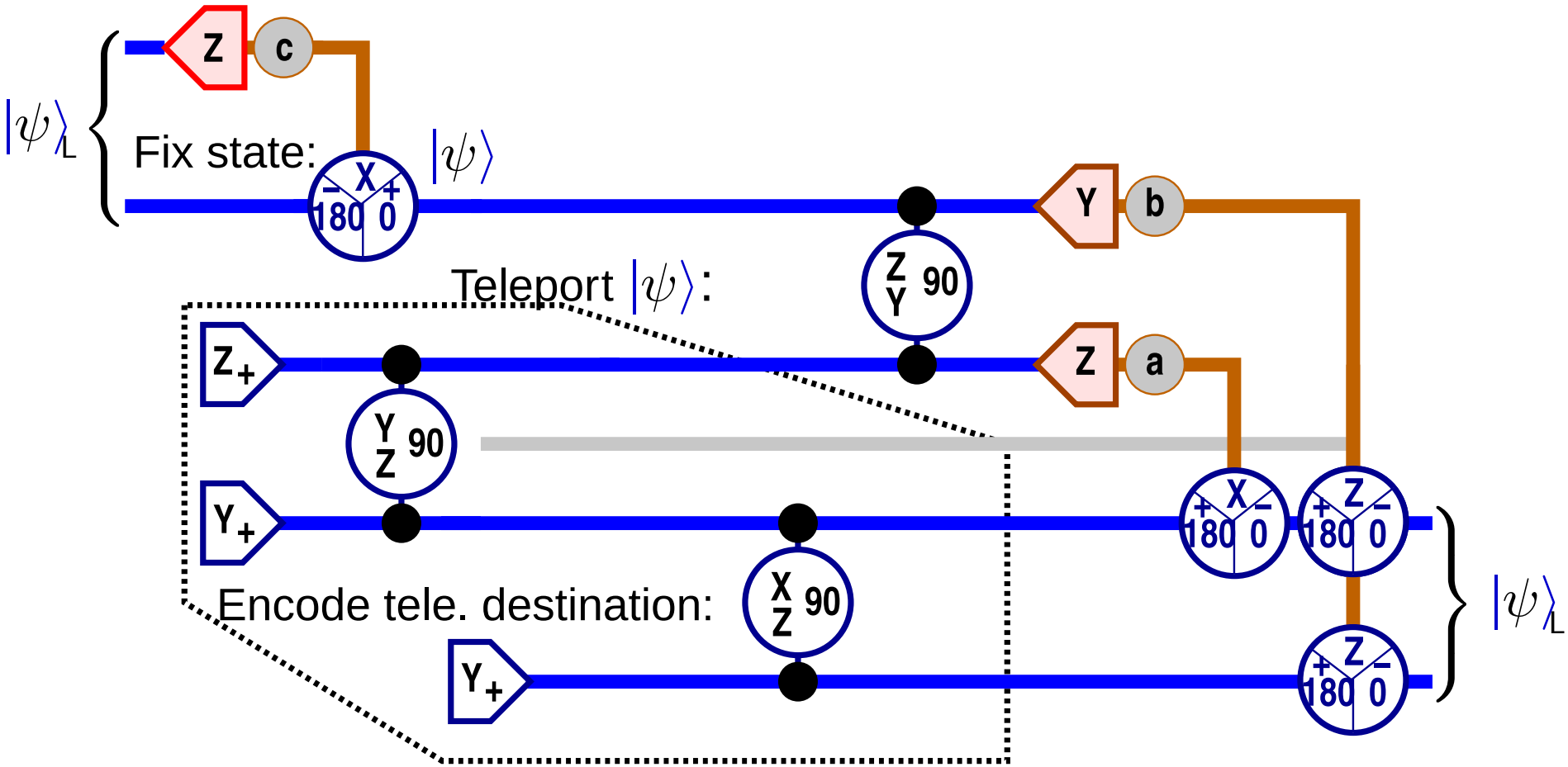

Recovery from Z-measurement Error

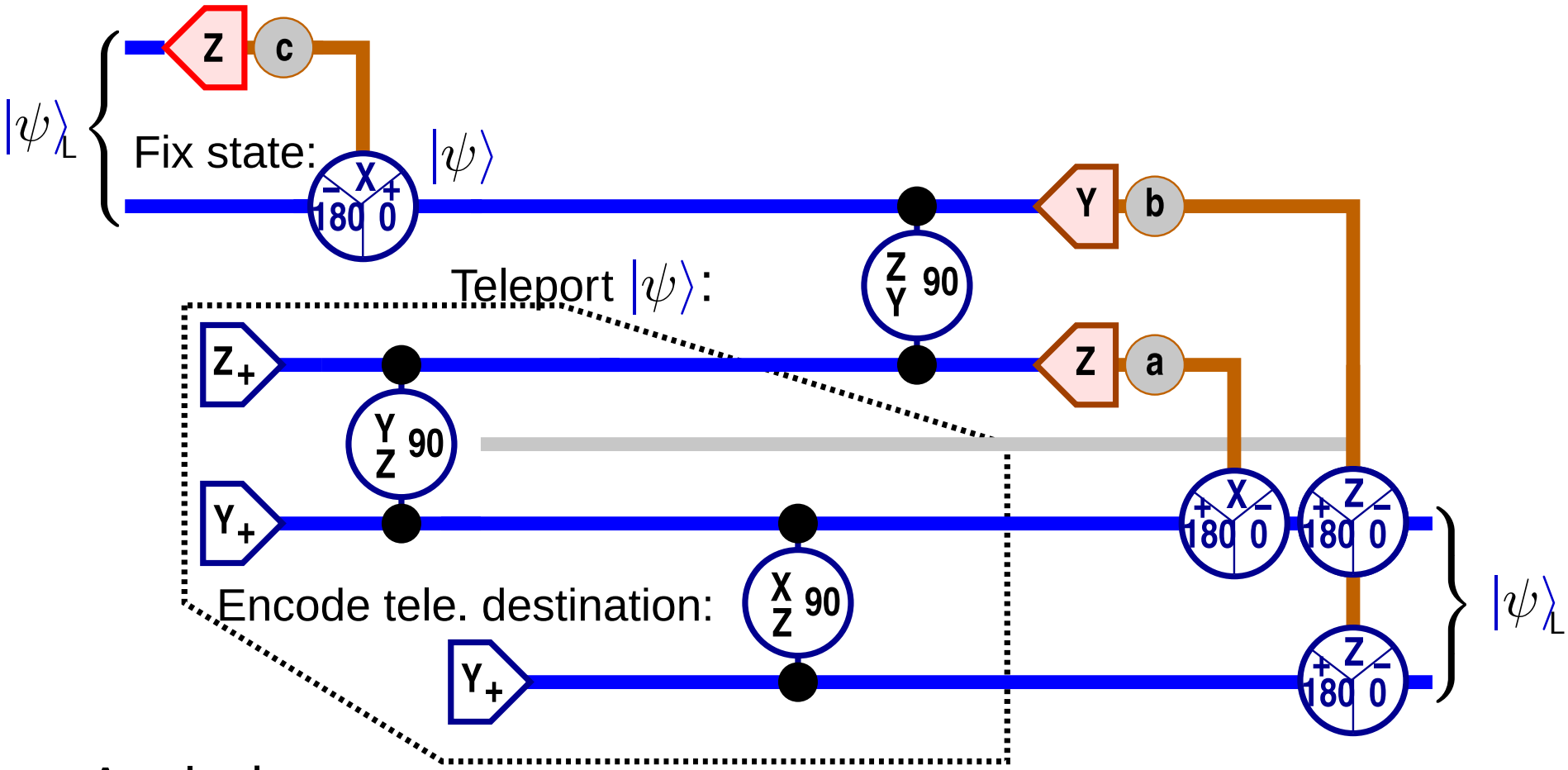

- Analysis:
  - Failure: Probability f, by $(Z)_L$ measurement.

Forward to: $\mathcal{X}_2$ threshold

Encoded $(ZZ)_{90^\circ}$

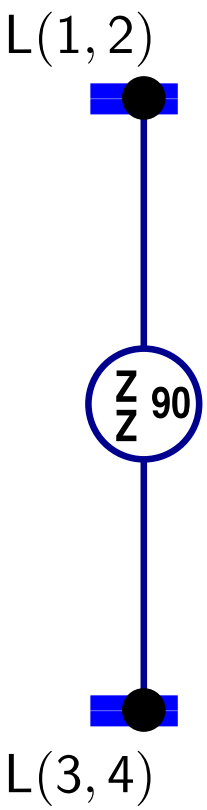

Encoded $(ZZ)_{90^\circ}$

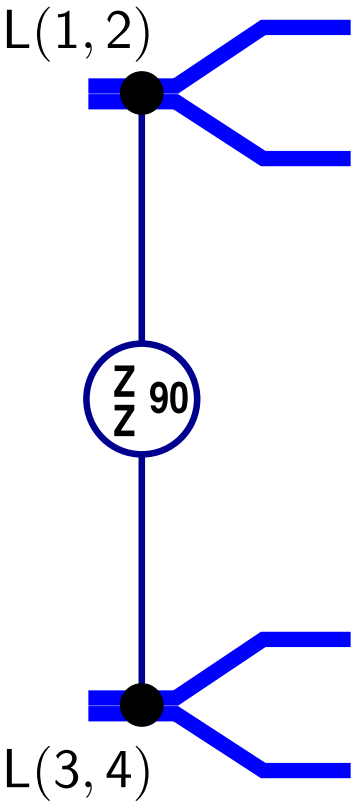

Encoded $(ZZ)_{90^\circ}$

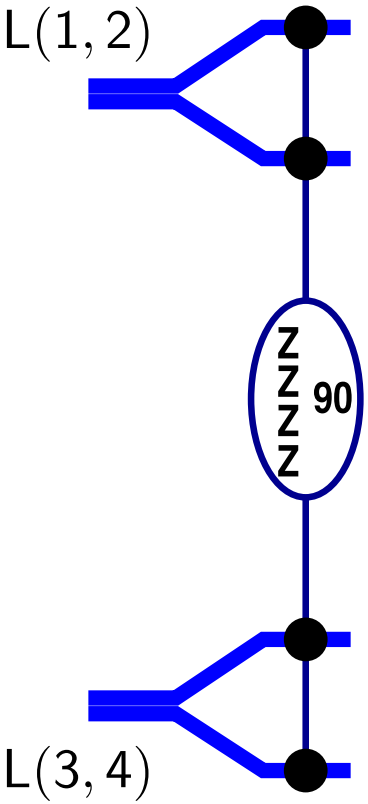

Encoded $(ZZ)_{90°}$

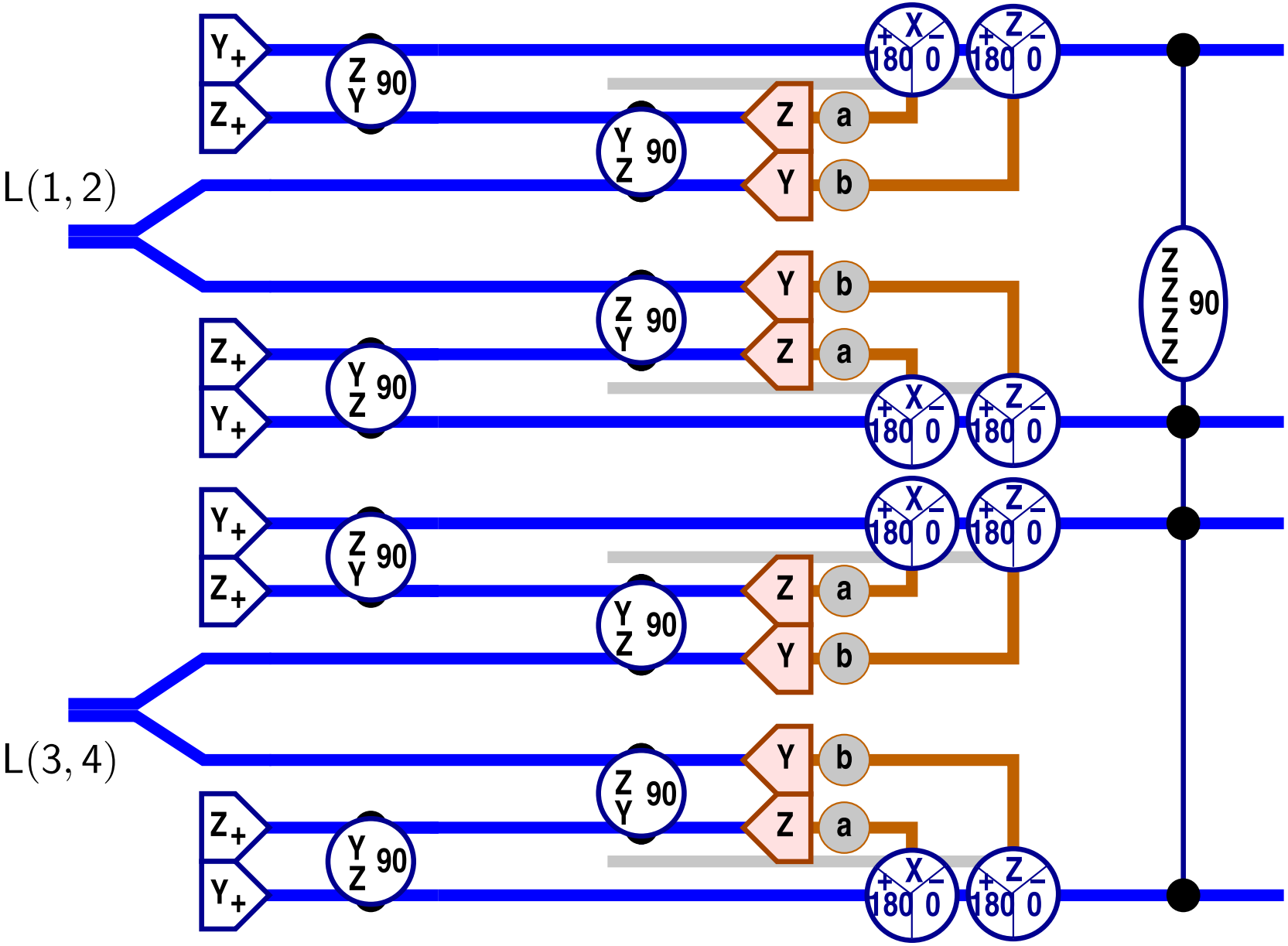

Encoded $(ZZ)_{90^\circ}$

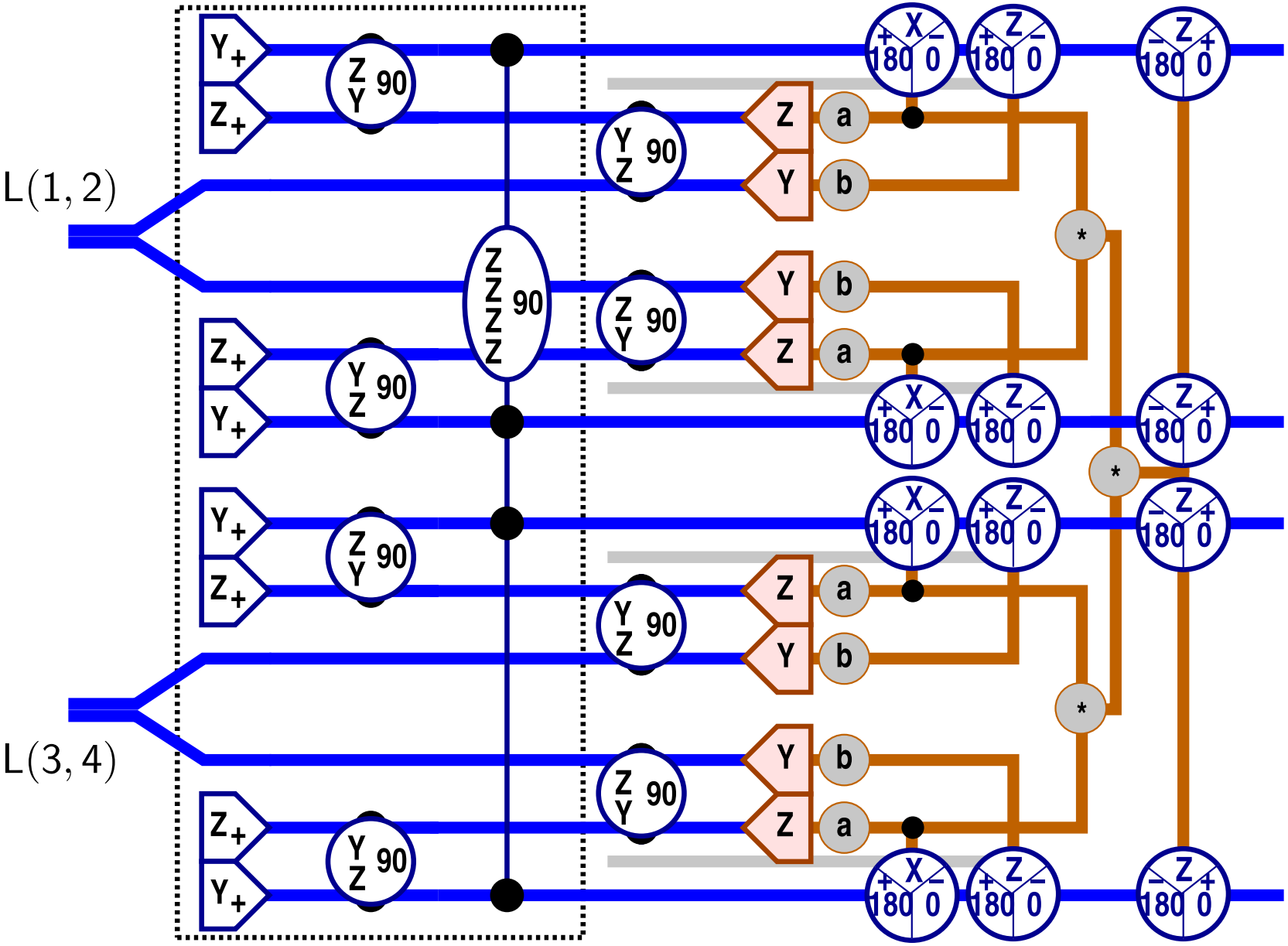

Zooming in on eLOQC

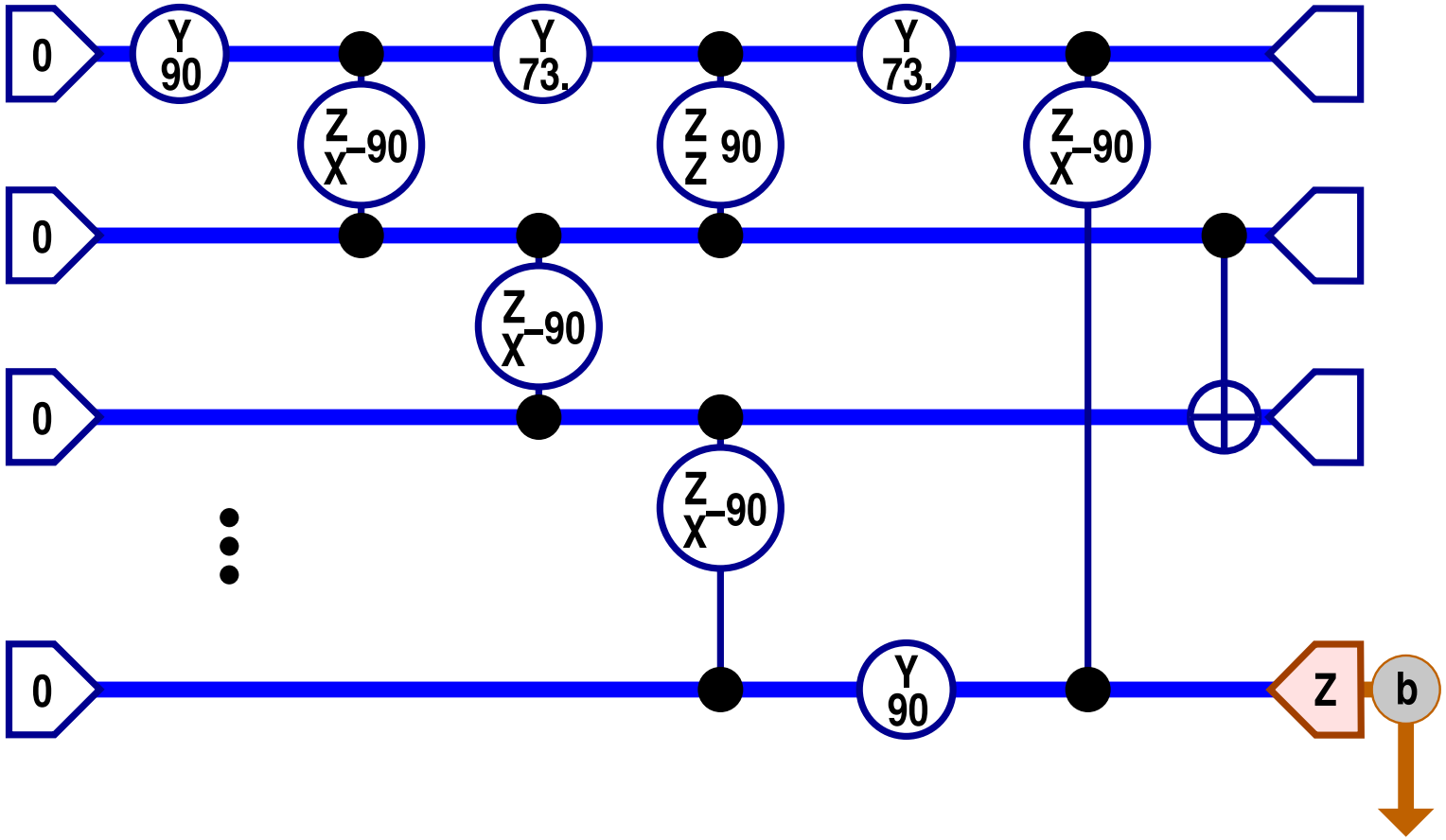

Zooming in on eLOQC

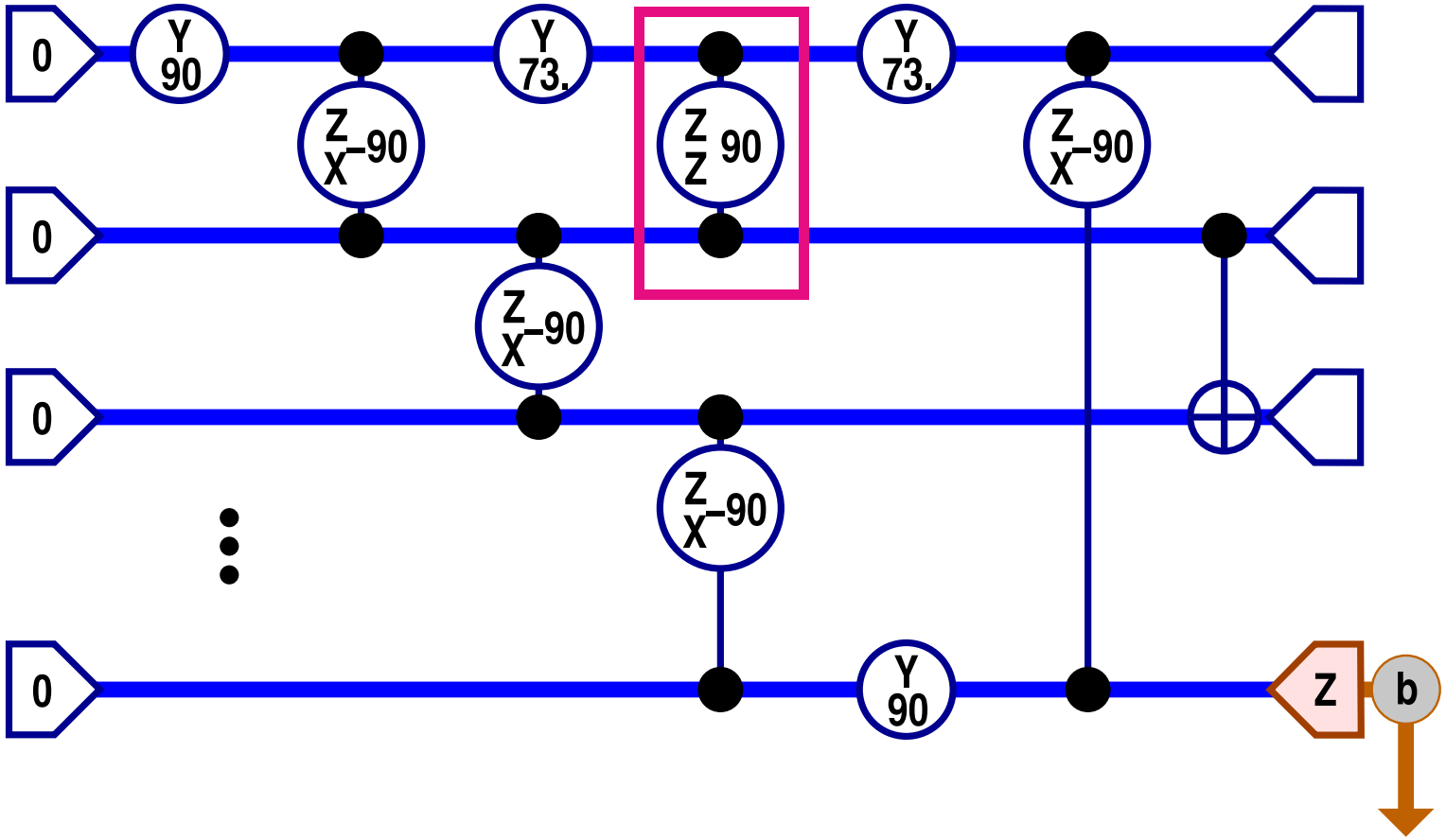

Zooming in on eLOQC

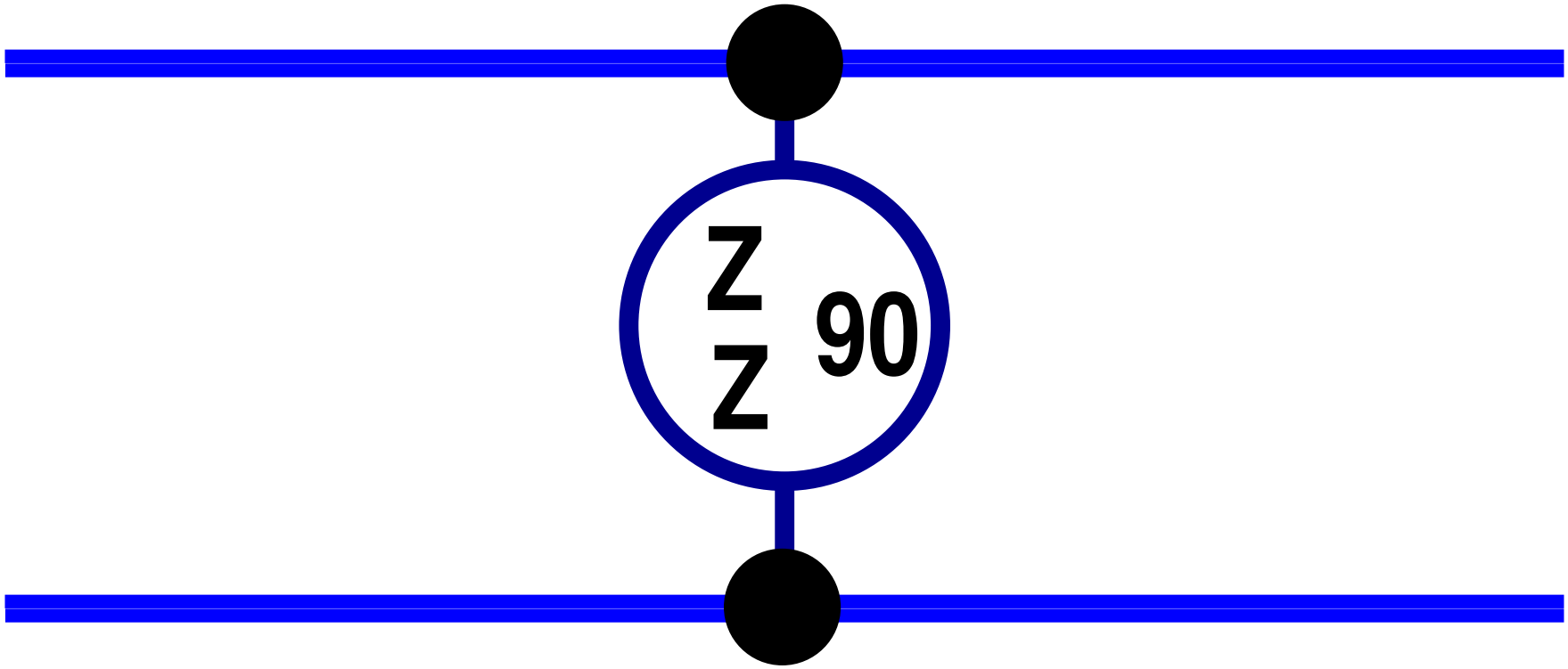

Zooming in on eLOQC

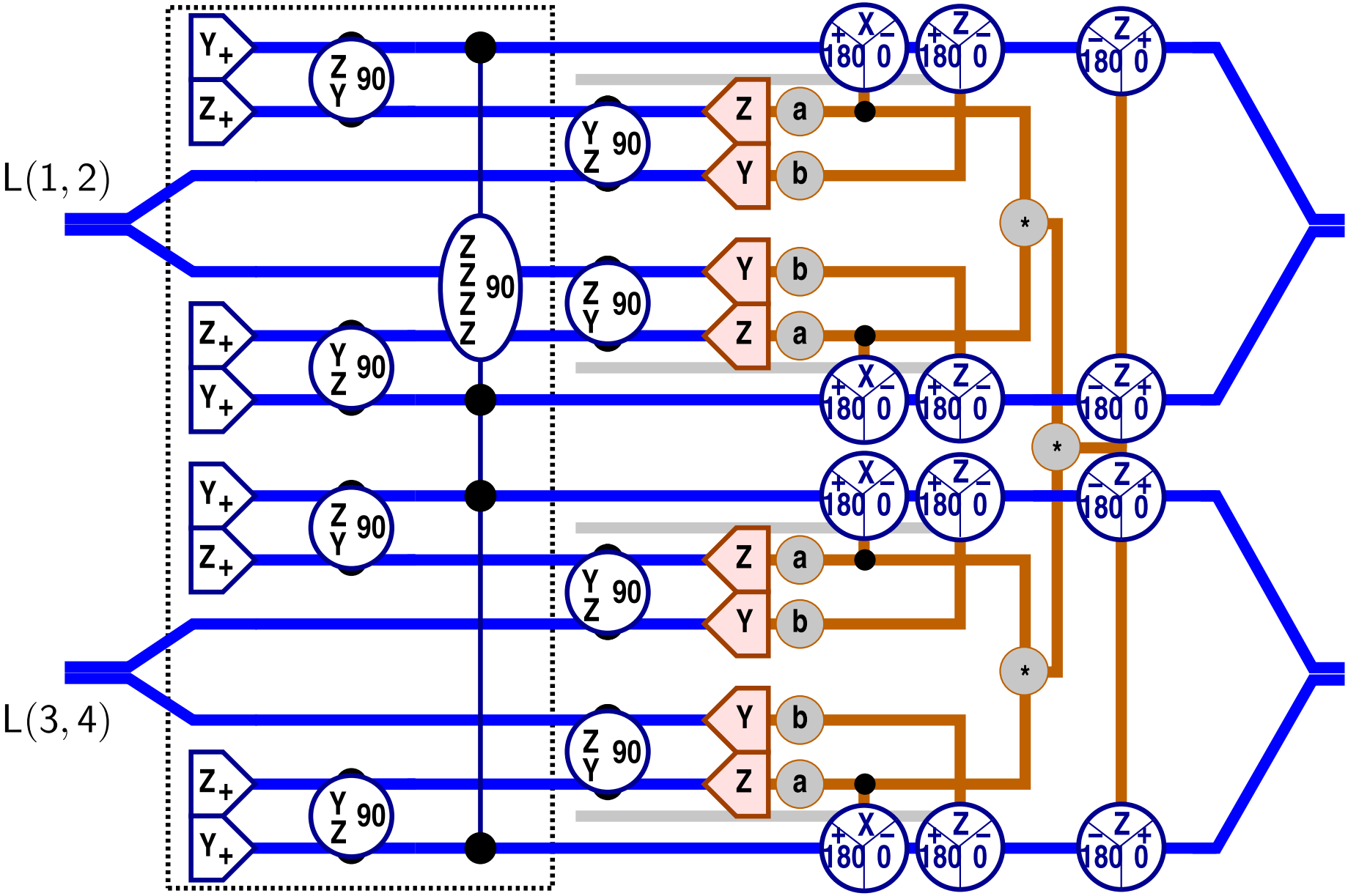

Zooming in on eLOQC

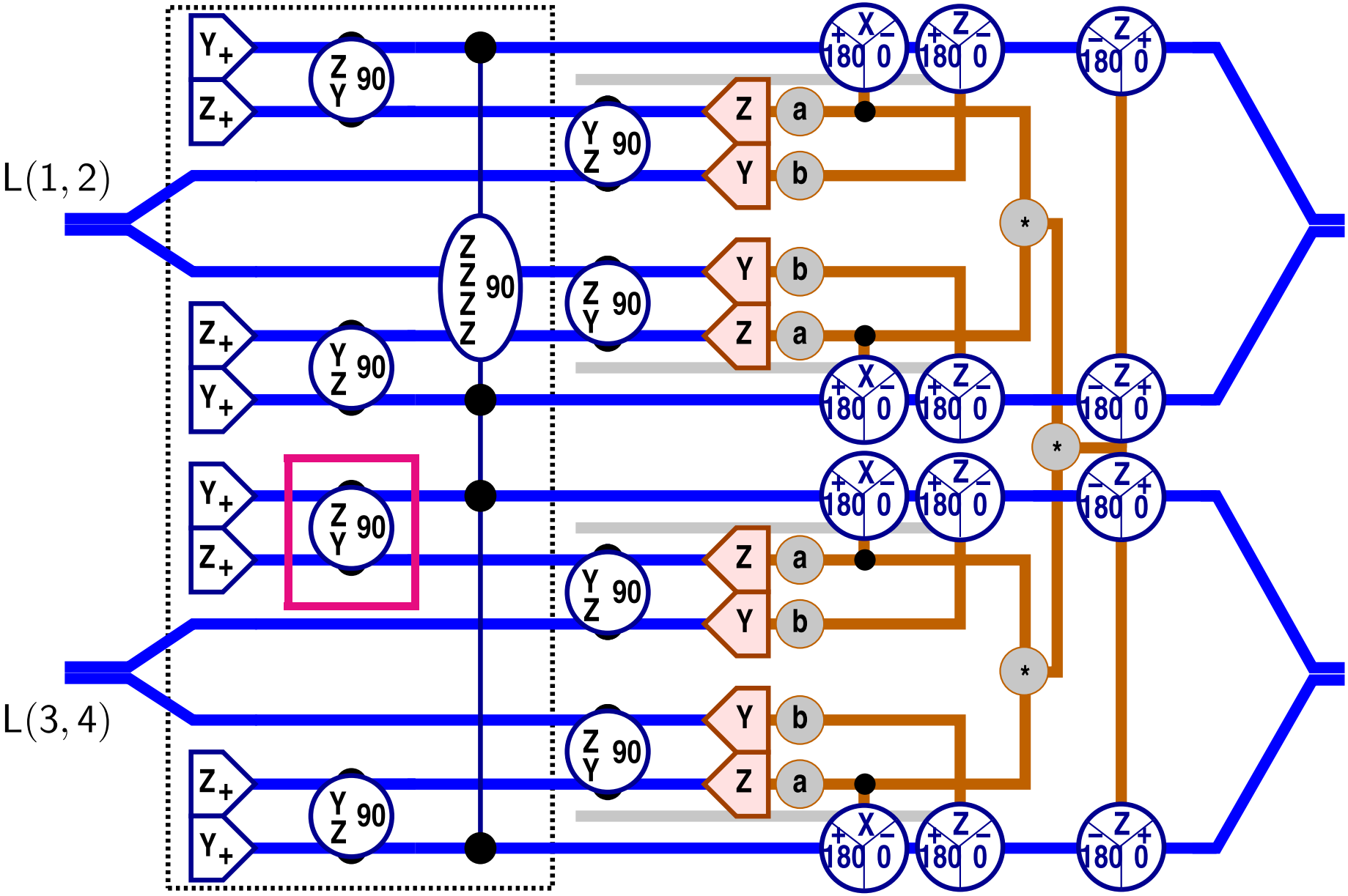

Zooming in on eLOQC

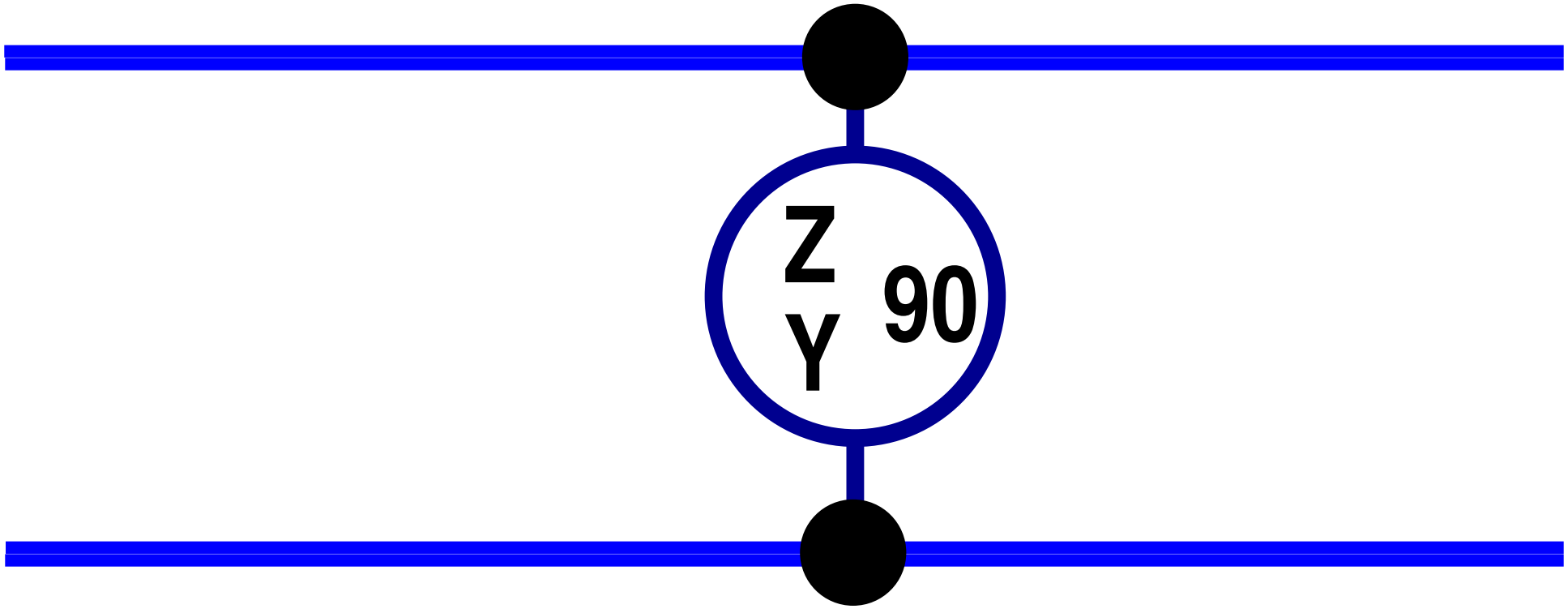

Zooming in on eLOQC

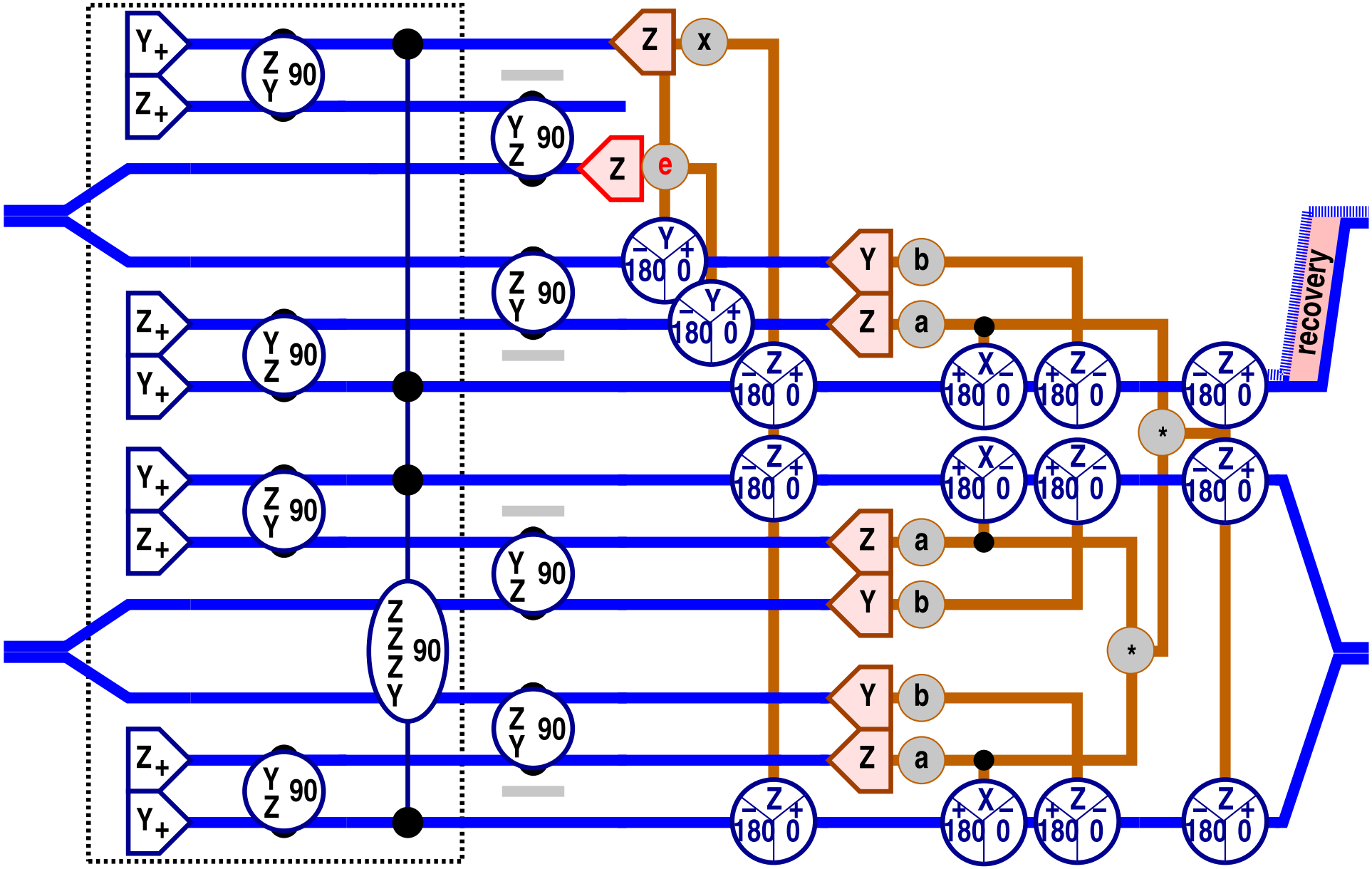

Zooming in on eLOQC

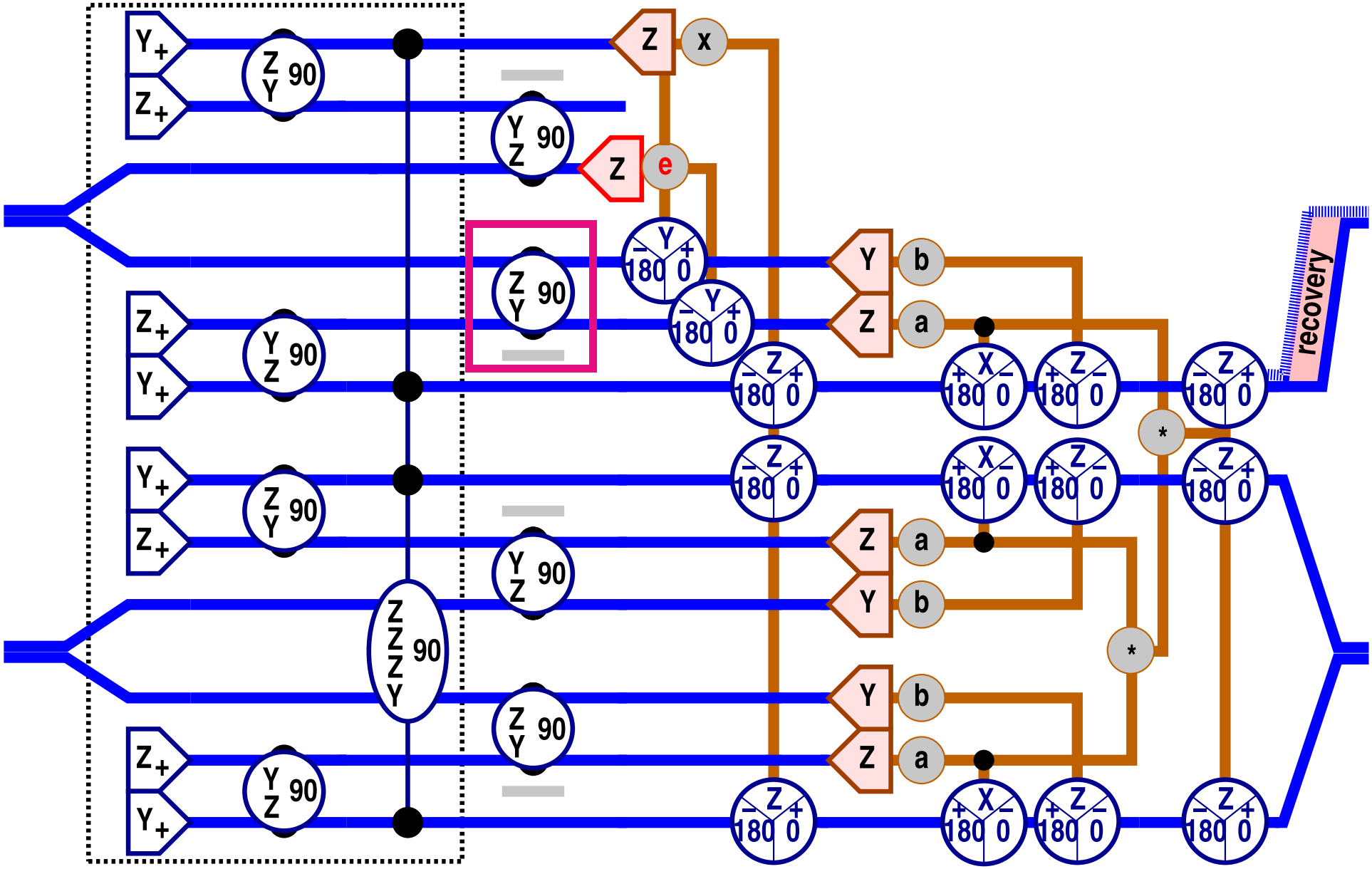

Zooming in on eLOQC

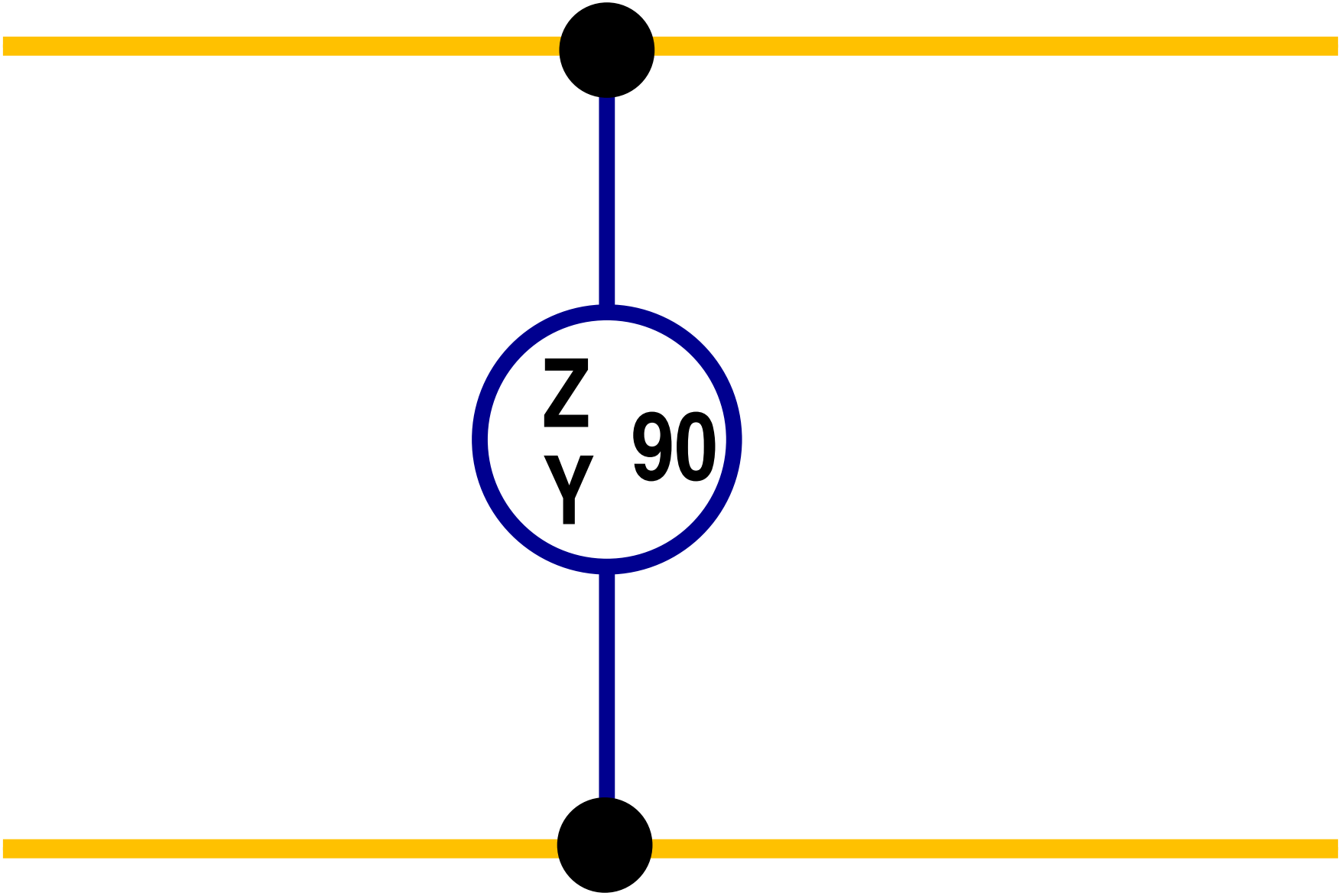

Zooming in on eLOQC

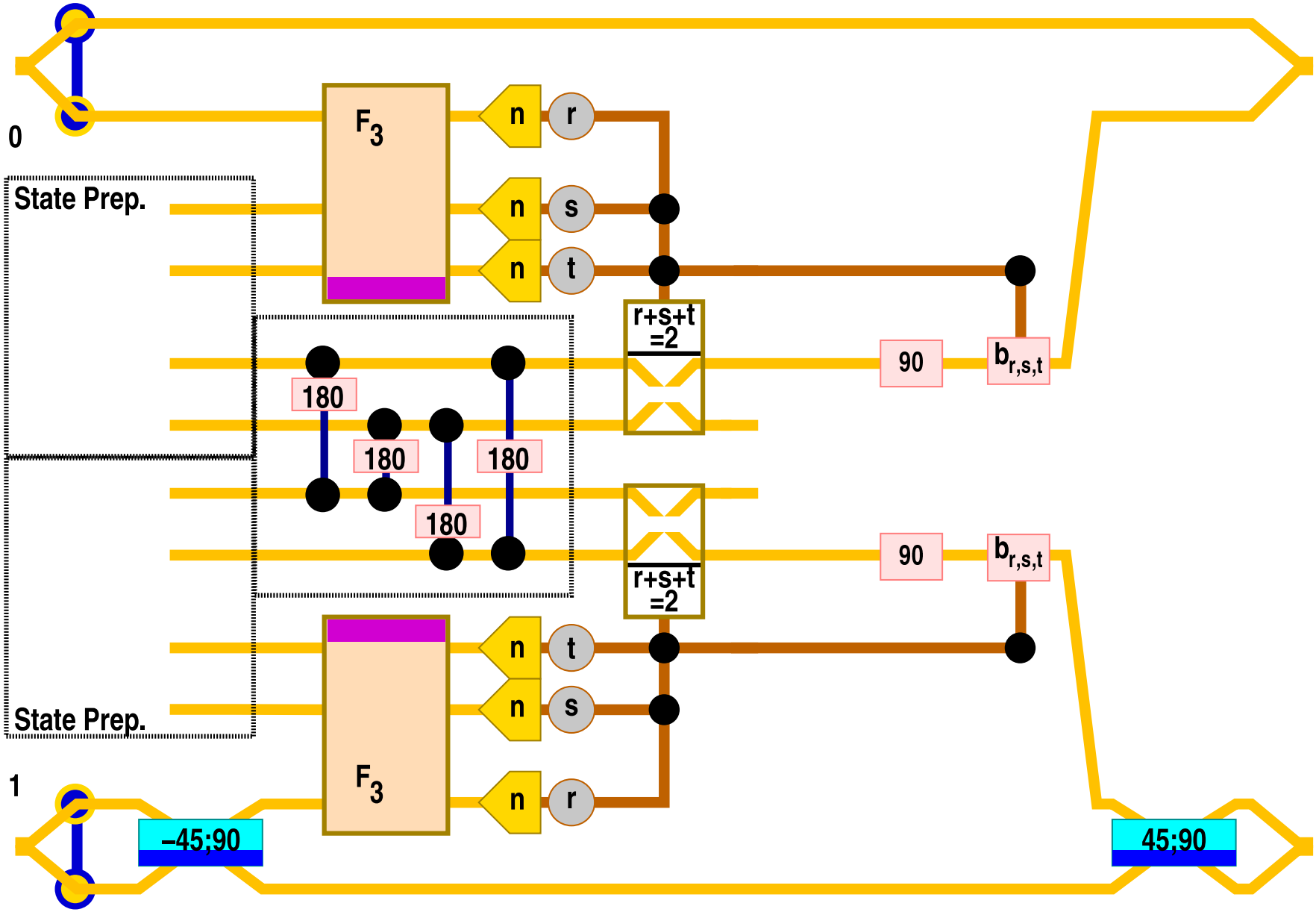

Zooming in on eLOQC

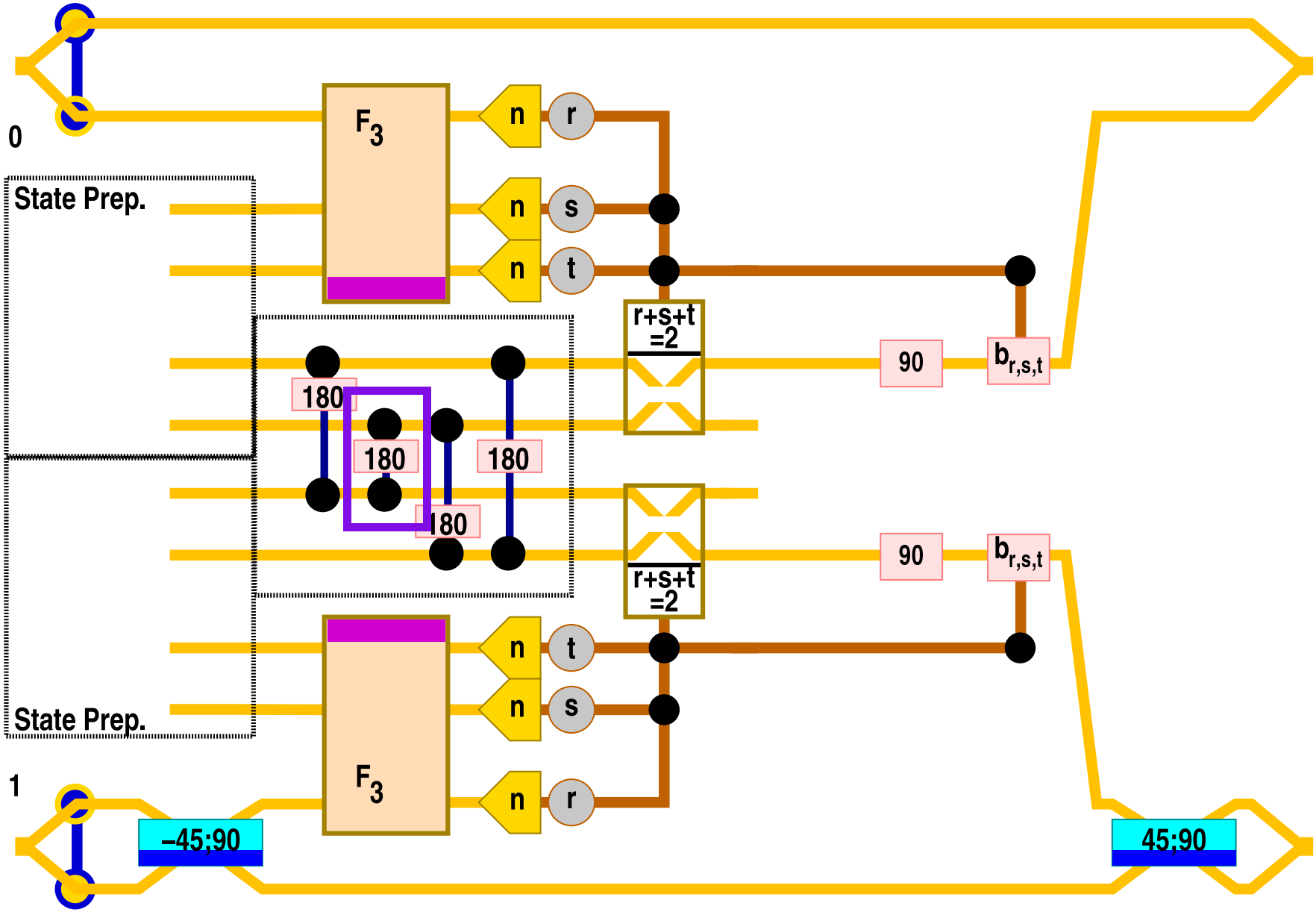

Zooming in on eLOQC

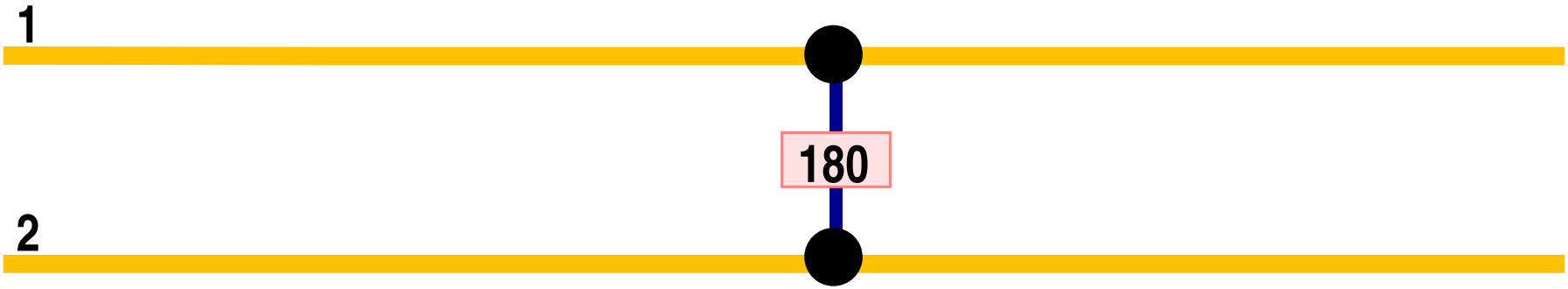

Zooming in on eLOQC

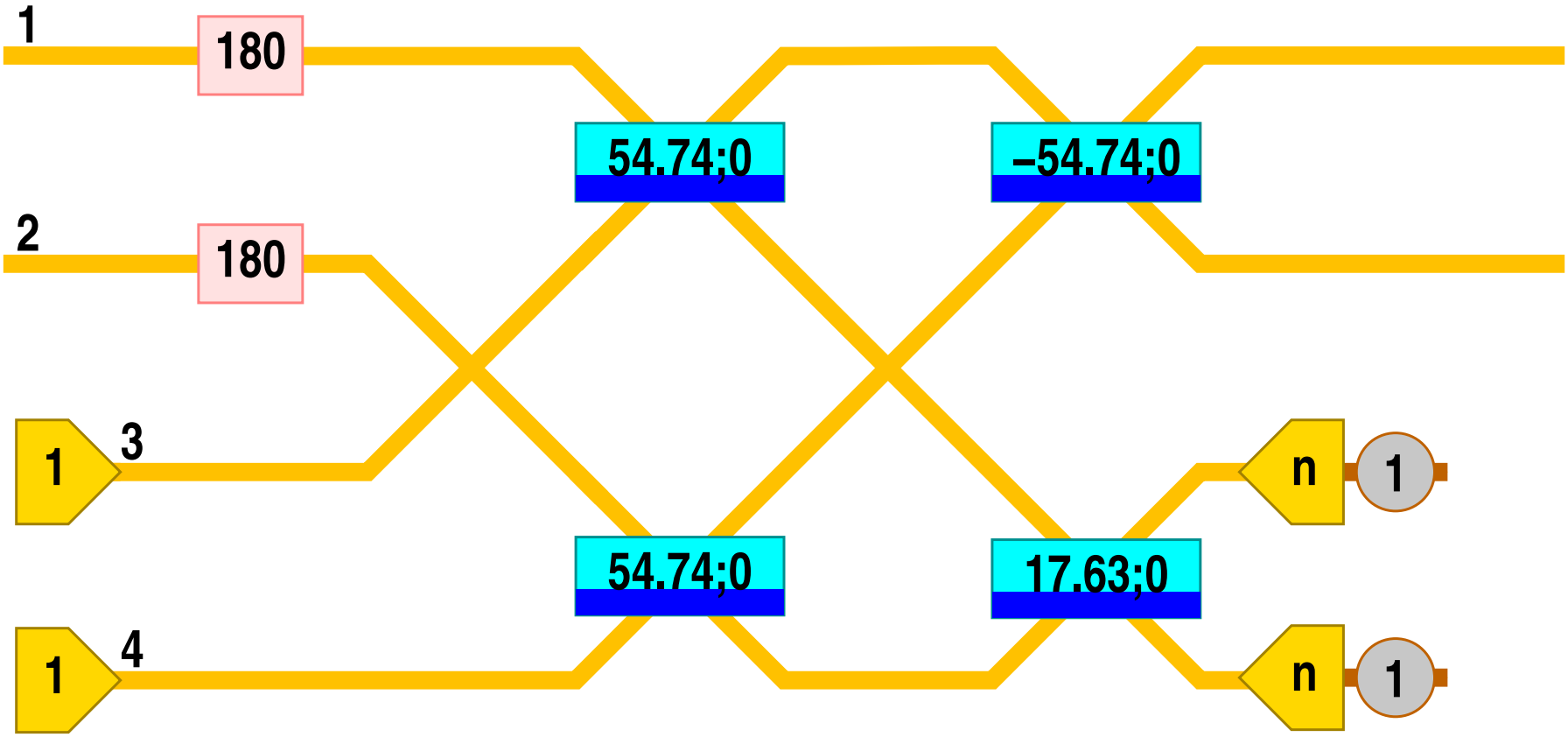

Back to: Guide

Encoded Failure Analysis

- For $(ZZ)_{90^\circ}$, independently on each encoded qubit:
  - prob.$= f^2$: Encoded Z-measurement error.
  - prob.$= (1-f)^2$: Success.
  - prob.$= 2(1-f)f$: One Z-measurement error.
    - prob.$= (1-f)$: Re-encoding succeeds.
    - prob.$= f$: Encoded Z-measurement error.

Encoded Failure Analysis

- For $(ZZ)_{90^\circ}$, independently on each encoded qubit:
  - prob.$= f^2$: Encoded Z-measurement error.
  - prob.$= (1-f)^2$: Success.
  - prob.$= 2(1-f)f$: One Z-measurement error.
    - prob.$= (1-f)$: Re-encoding succeeds.
    - prob.$= f$: Encoded Z-measurement error.
- Failure probability/encoded qubit: $f^2 + 2f^2(1-f) = f^2(3-2f)$.

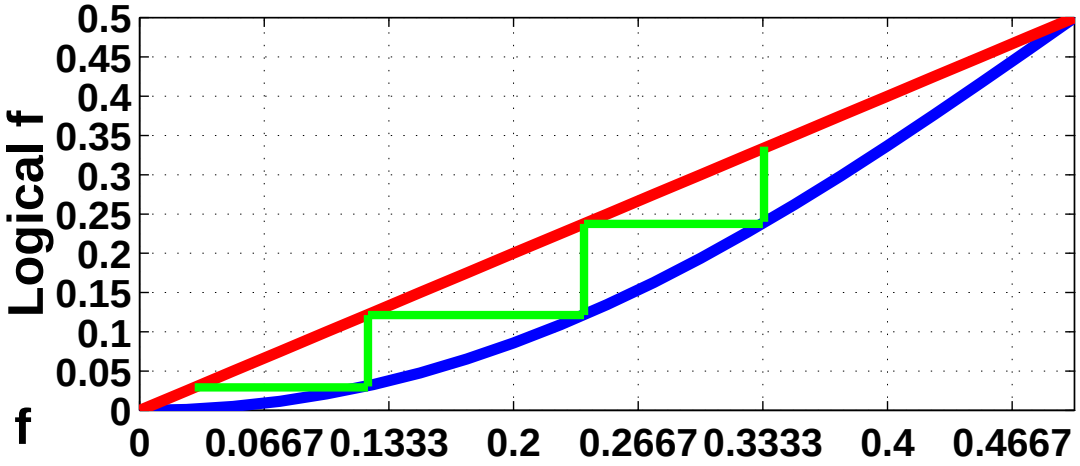

Encoded Failure Analysis

- For $(ZZ)_{90^\circ}$, independently on each encoded qubit:
  - prob.$= f^2$: Encoded Z-measurement error.
  - prob.$= (1-f)^2$: Success.
  - prob.$= 2(1-f)f$: One Z-measurement error.
    - prob.$= (1-f)$: Re-encoding succeeds.
    - prob.$= f$: Encoded Z-measurement error.
- Failure probability/encoded qubit: $f^2 + 2f^2(1-f) = f^2(3-2f)$.

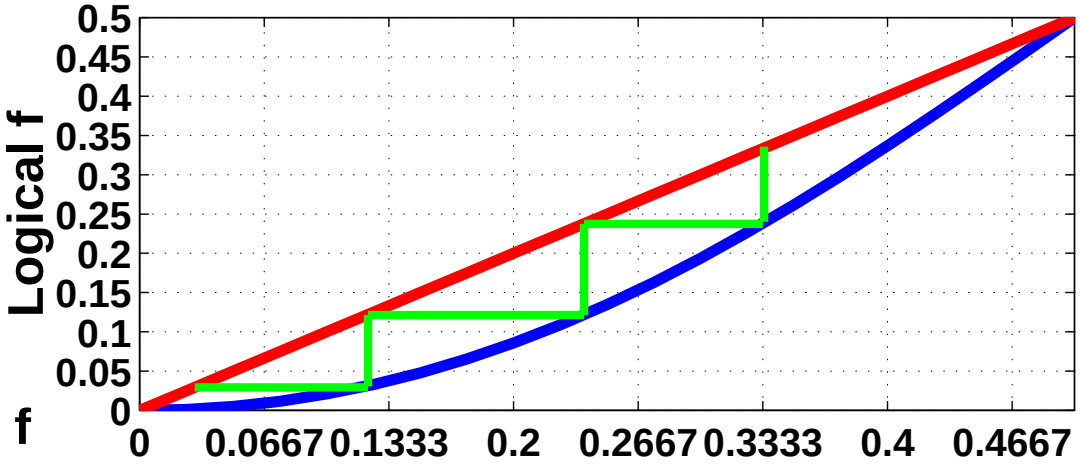

- Z-measurement accuracy threshold $\geq .5$.

Go to: It is $= 1$.
Back to: Guide

Detecting Qubit Loss

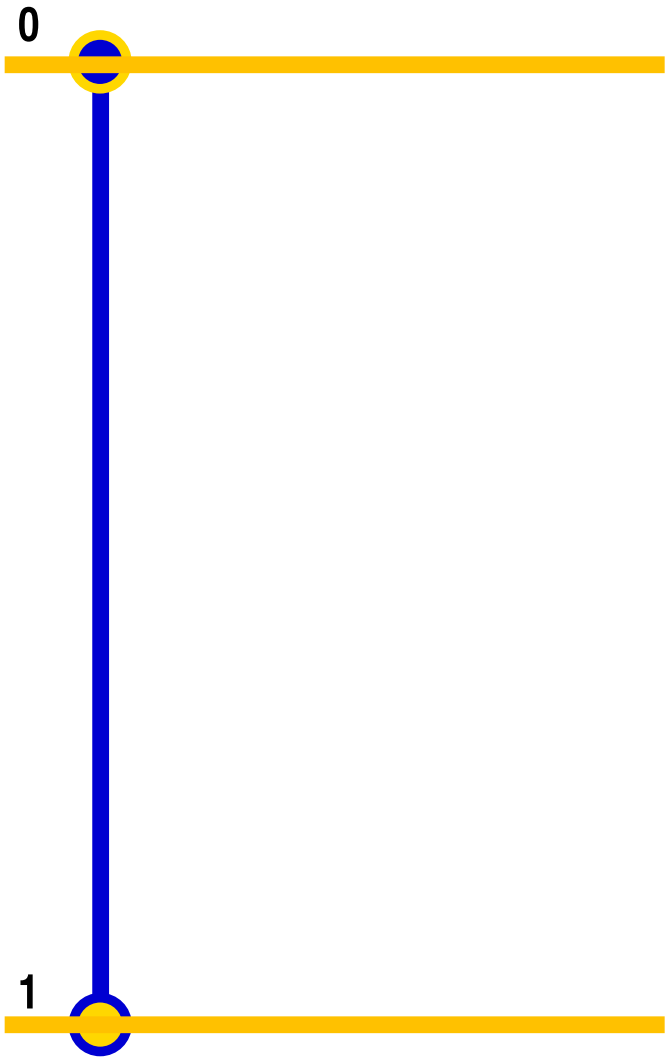

Detecting Qubit Loss

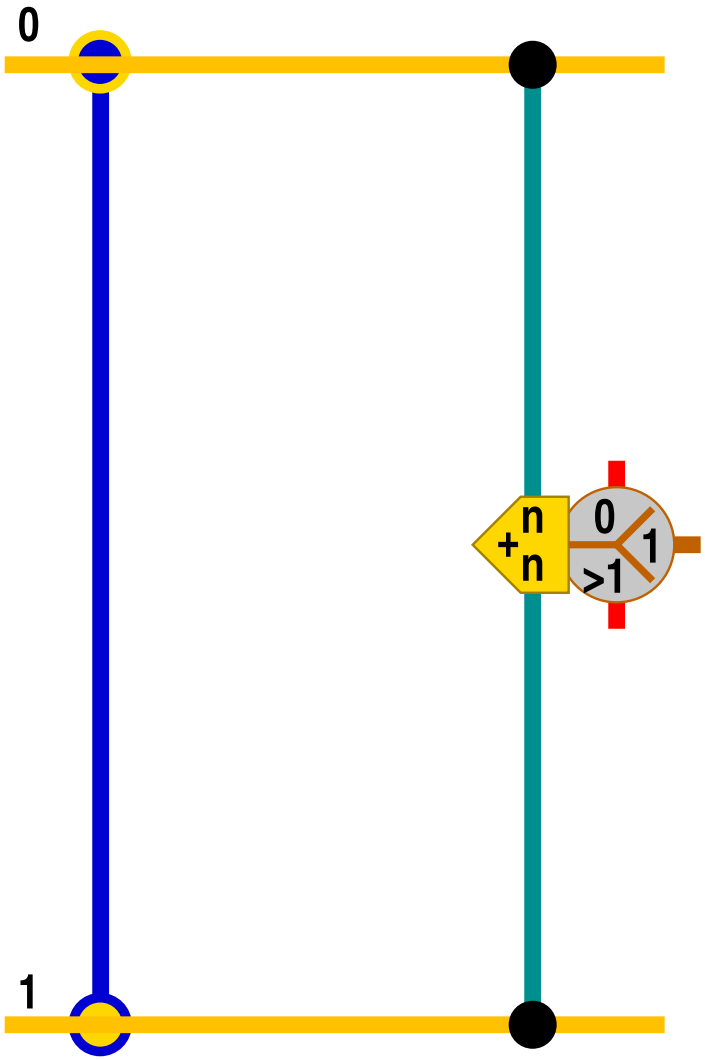

Detecting Qubit Loss

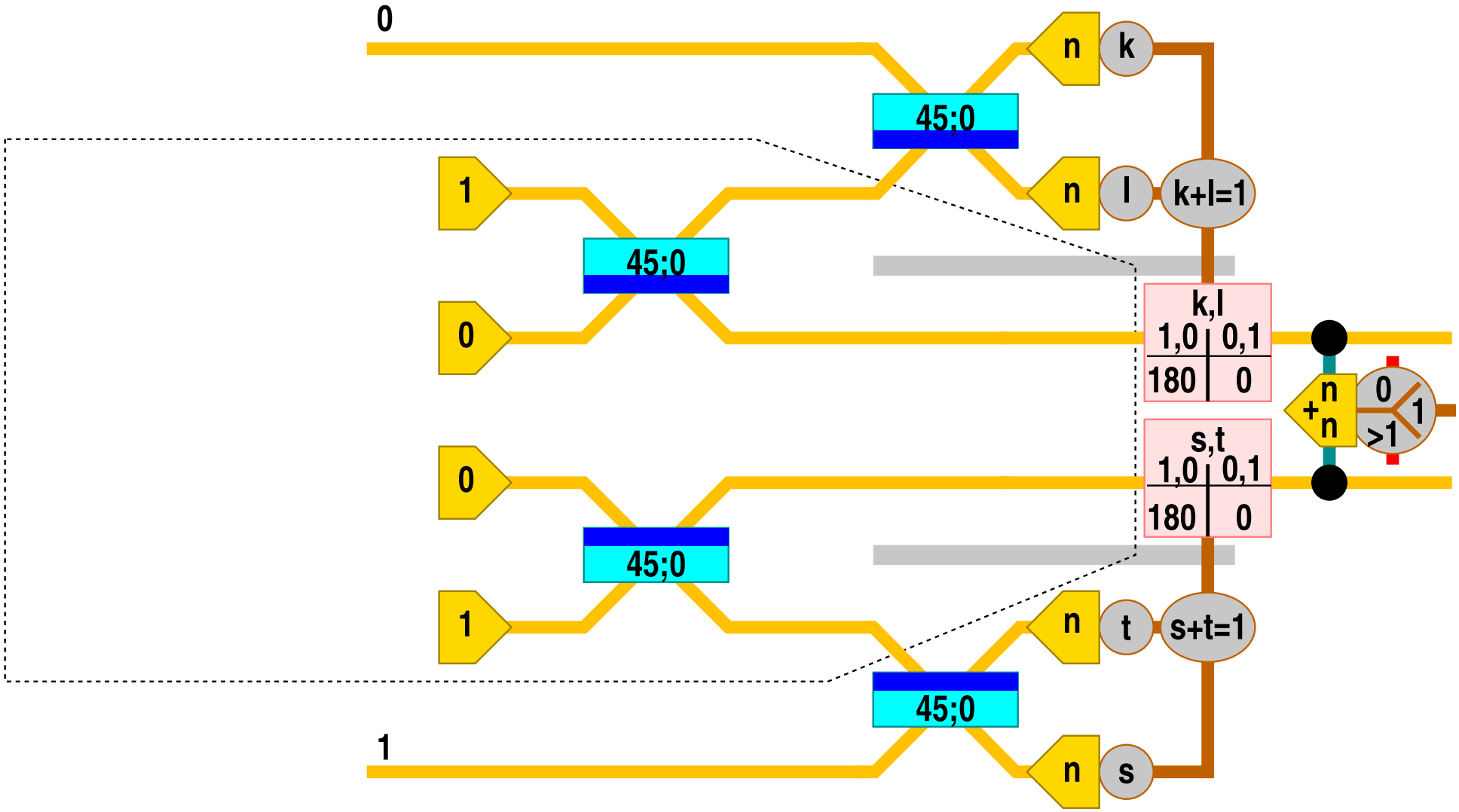

Detecting Qubit Loss

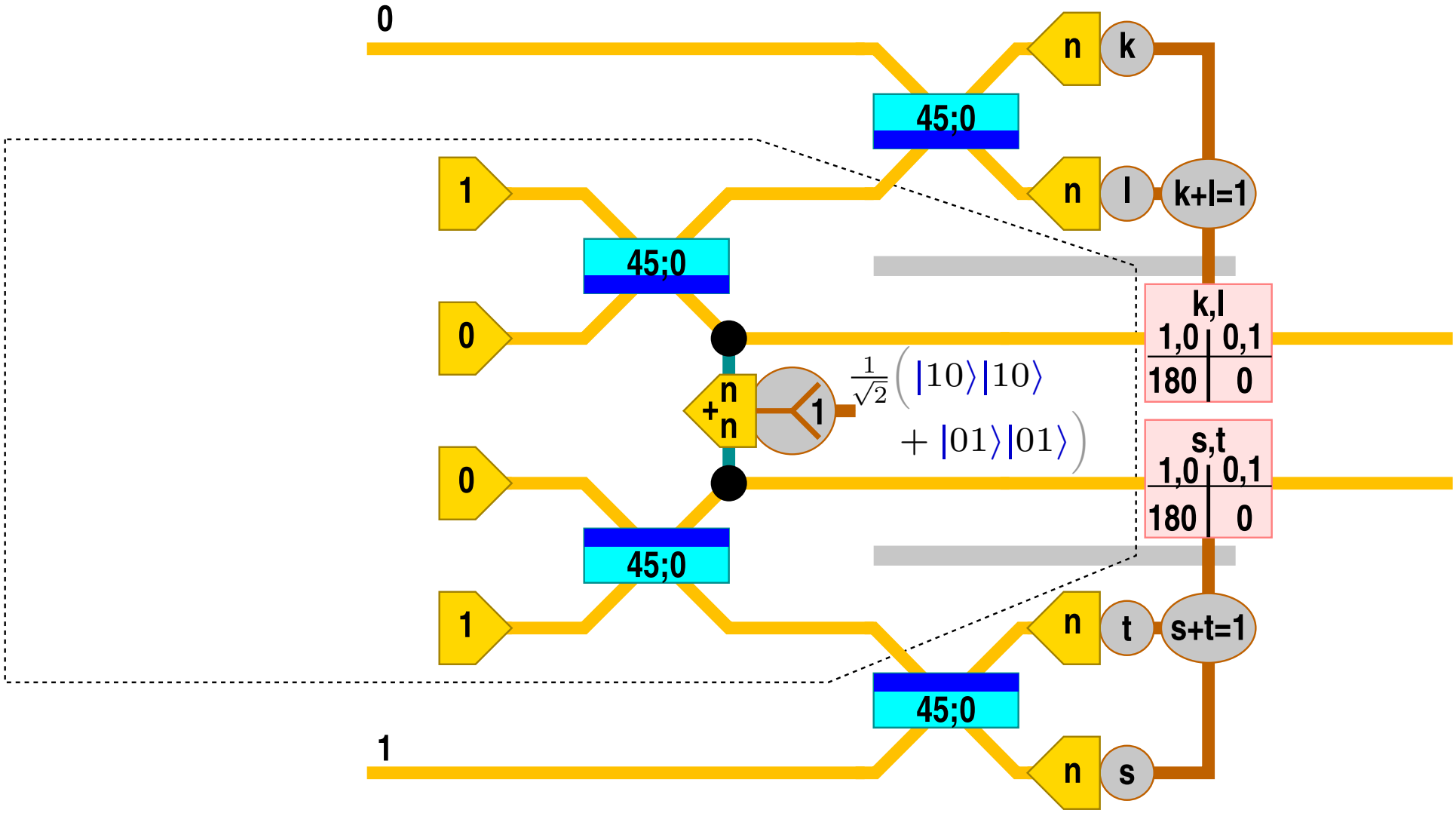

Detecting Qubit Loss

$(k+l=1)\&(s+t=1) \rightarrow$ No loss. $(k+l+s+t=1) \rightarrow$ Input$=|00\rangle$.

$(k+l+s+t=0) \rightarrow$ Prep. error. $(k+l+s+t>2) \rightarrow$ Excess photons.

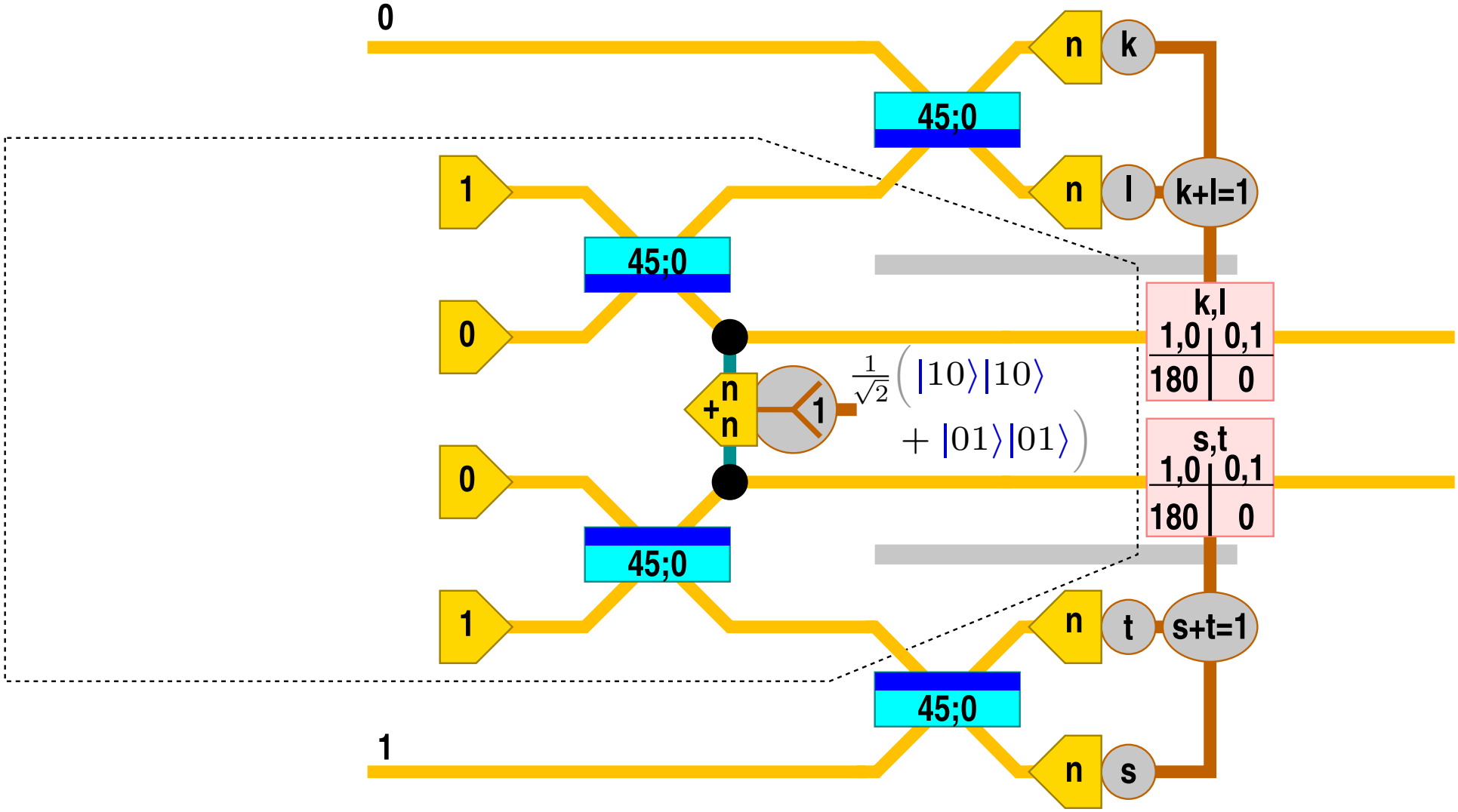

Detecting Qubit Loss

Robust teleport ($rTel_1$) with LOQC state preparation:

Success probability: $1/2$

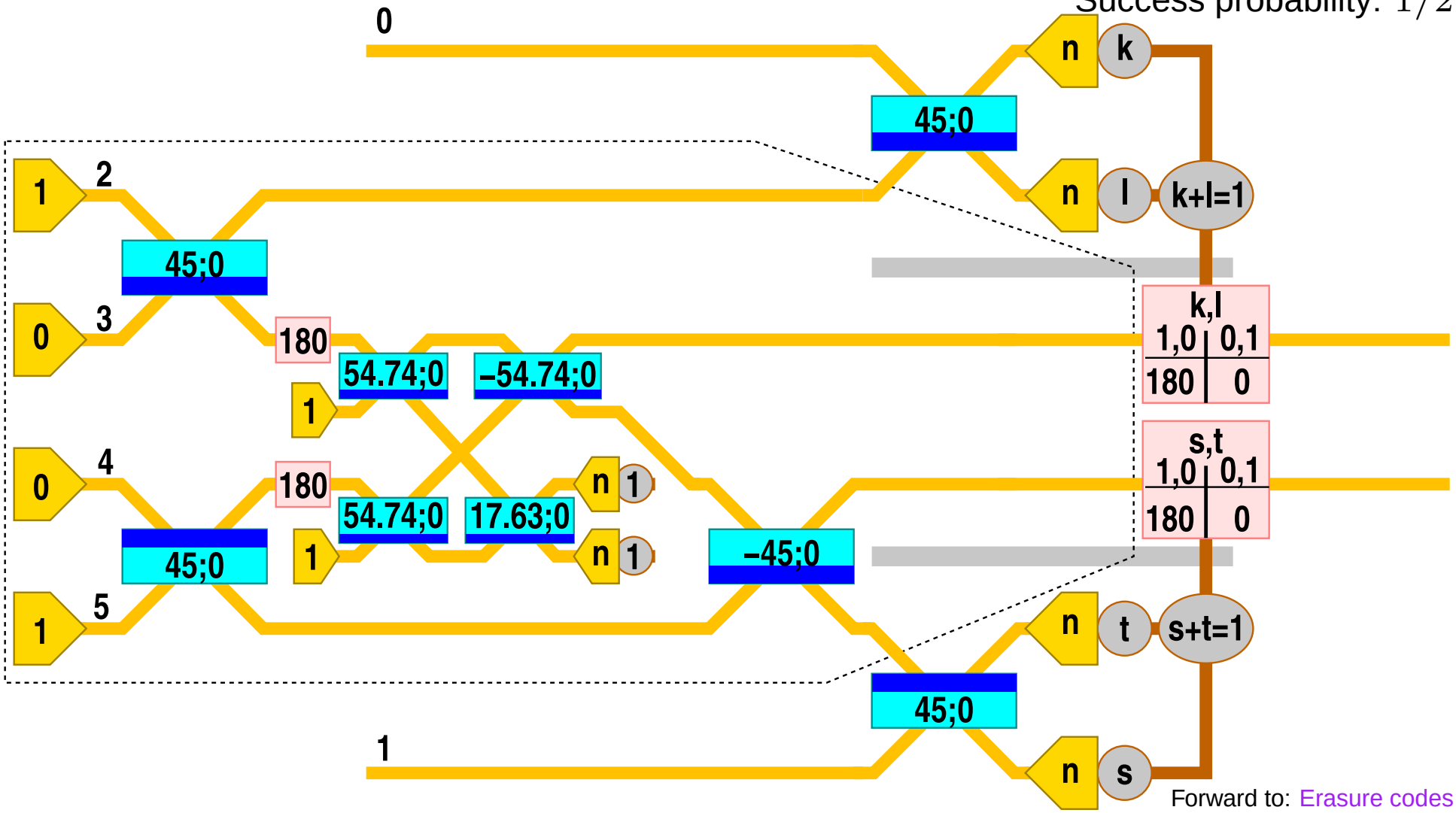

Forward to: Erasure codes

rTel for Loss and Leakage[a]

- Behavior for photon loss:
  Every loss error is:
  - Detected, or
  - Loss in output induced by loss in preparation.

- Includes detector inefficiency

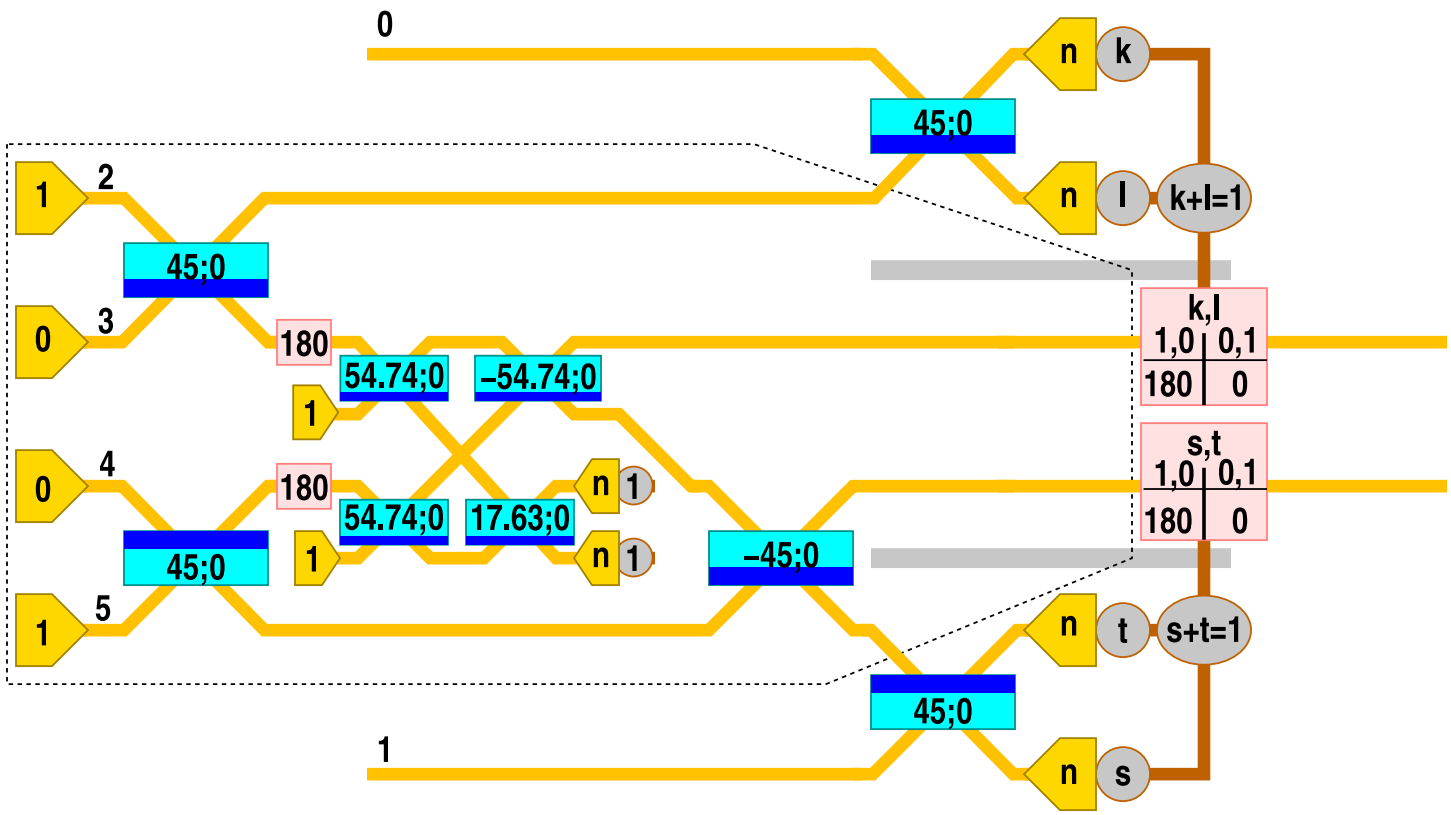

[a]Leakage: Loss of amplitude from qubit state space.

rTel for Loss and Leakage[a]

- Behavior for photon loss:
  Every loss error is:
  - Detected, or
  - Loss in output induced by loss in preparation.

- Includes detector inefficiency

- Behavior for general leakage:
  Any input state, only photon loss in prep:
  - Output state has at most 1 photon.

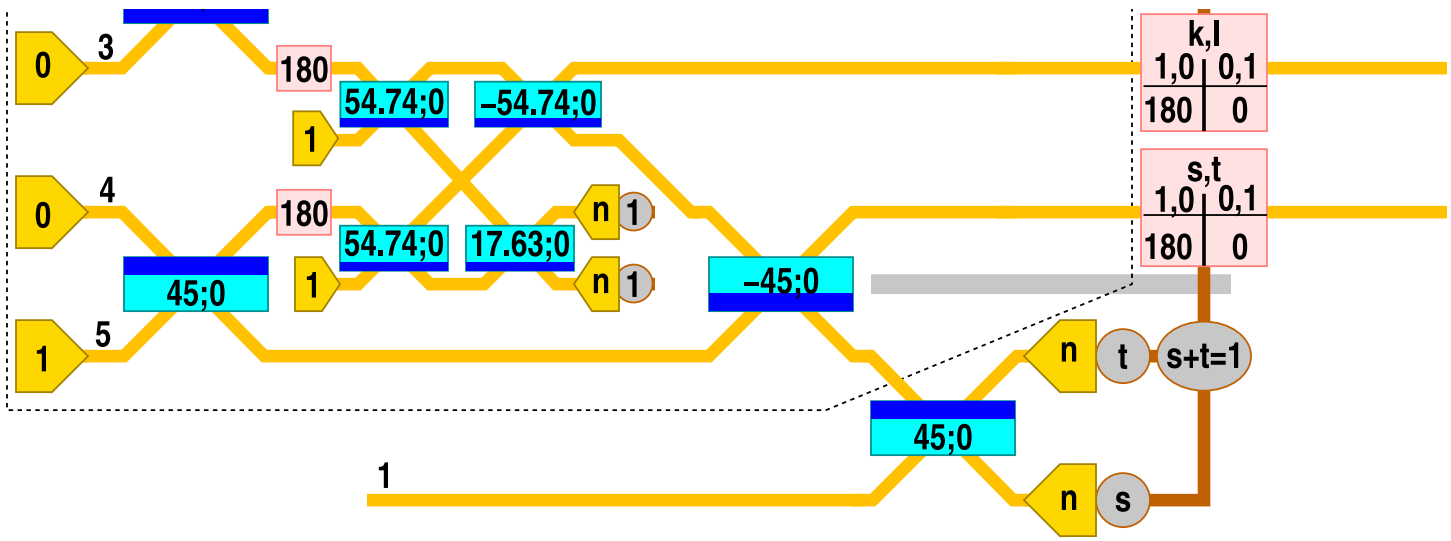

[a]Leakage: Loss of amplitude from qubit state space.

rTel for Loss and Leakage[a]

- Behavior for photon loss:
  Every loss error is:
  - Detected, or
  - Loss in output induced by loss in preparation.

- Includes detector inefficiency

- Behavior for general leakage:
  Any input state, only photon loss in prep:
  - Output state has at most 1 photon.

- For teleportation in general:
  - Leakage in output requires state prep. error.
  - $\longrightarrow$ Leakage errors cannot accumulate.

[a] Leakage: Loss of amplitude from qubit state space.

Erasure Codes and Thresholds

- With rTel: Photon loss $=$ detected erasure error.
- Thresholds for erasure errors are $> 1\%$.

Knill&Laflamme&Milburn 2000 [19]

Back to: Guide

Priority Based Error Control

- Errors and some methods for their control in eLOQC:

1. Z-measurement errors (failed postselected gates).

Priority Based Error Control

- Errors and some methods for their control in eLOQC:

1. Z-measurement errors (failed postselected gates).
   - Use Z-detecting stabilizer codes. See eLOQC IV, V.

Priority Based Error Control

- Errors and some methods for their control in eLOQC:

1. Z-measurement errors (failed postselected gates).
   - Use Z-detecting stabilizer codes. See eLOQC IV, V.

1.a. Phase noise.

Priority Based Error Control

- Errors and some methods for their control in eLOQC:

1. Z-measurement errors (failed postselected gates).
   - Use Z-detecting stabilizer codes. See eLOQC IV, V.

1.a. Phase noise.
   - Use Z-detecting codes based on good classical codes and syndrome based recovery methods.

Priority Based Error Control

- Errors and some methods for their control in eLOQC:

1. Z-measurement errors (failed postselected gates).

   - Use Z-detecting stabilizer codes. See eLOQC IV, V.

1.a. Phase noise.

   - Use Z-detecting codes based on good classical codes and syndrome based recovery methods.

1.b. Photon loss, detector inefficiency.

Priority Based Error Control

- Errors and some methods for their control in eLOQC:

1. Z-measurement errors (failed postselected gates).

   - Use Z-detecting stabilizer codes. See eLOQC IV, V.

1.a. Phase noise.

   - Use Z-detecting codes based on good classical codes and syndrome based recovery methods.

1.b. Photon loss, detector inefficiency.

   - Use loss detection and erasure codes. See eLOQC VI, VII.

Priority Based Error Control

- Errors and some methods for their control in eLOQC:

1. Z-measurement errors (failed postselected gates).
   - Use Z-detecting stabilizer codes. See eLOQC IV, V.

1.a. Phase noise.
   - Use Z-detecting codes based on good classical codes and syndrome based recovery methods.

1.b. Photon loss, detector inefficiency.
   - Use loss detection and erasure codes. See eLOQC VI, VII.

2.a. Mode matching and beam-splitter angle errors.

Priority Based Error Control

- Errors and some methods for their control in eLOQC:

1. Z-measurement errors (failed postselected gates).
   - Use Z-detecting stabilizer codes. See eLOQC IV, V.

1.a. Phase noise.
   - Use Z-detecting codes based on good classical codes and syndrome based recovery methods.

1.b. Photon loss, detector inefficiency.
   - Use loss detection and erasure codes. See eLOQC VI, VII.

2.a. Mode matching and beam-splitter angle errors.
   - Use better calibration of the classical devices.

Priority Based Error Control

- Errors and some methods for their control in eLOQC:

1. Z-measurement errors (failed postselected gates).
   - Use Z-detecting stabilizer codes. See eLOQC IV, V.

1.a. Phase noise.
   - Use Z-detecting codes based on good classical codes and syndrome based recovery methods.

1.b. Photon loss, detector inefficiency.
   - Use loss detection and erasure codes. See eLOQC VI, VII.

2.a. Mode matching and beam-splitter angle errors.
   - Use better calibration of the classical devices.

2.b. Detector dark counts.

Priority Based Error Control

- Errors and some methods for their control in eLOQC:

1. Z-measurement errors (failed postselected gates).
   - Use Z-detecting stabilizer codes. See eLOQC IV, V.

1.a. Phase noise.
   - Use Z-detecting codes based on good classical codes and syndrome based recovery methods.

1.b. Photon loss, detector inefficiency.
   - Use loss detection and erasure codes. See eLOQC VI, VII.

2.a. Mode matching and beam-splitter angle errors.
   - Use better calibration of the classical devices.

2.b. Detector dark counts.
   - Reduce them by engineering.

Priority Based Error Control

- Errors and some methods for their control in eLOQC:

1. Z-measurement errors (failed postselected gates).
   - Use Z-detecting stabilizer codes. See eLOQC IV, V.

1.a. Phase noise.
   - Use Z-detecting codes based on good classical codes and syndrome based recovery methods.

1.b. Photon loss, detector inefficiency.
   - Use loss detection and erasure codes. See eLOQC VI, VII.

2.a. Mode matching and beam-splitter angle errors.
   - Use better calibration of the classical devices.

2.b. Detector dark counts.
   - Reduce them by engineering.

3. Remaining residual errors.

Priority Based Error Control

- Errors and some methods for their control in eLOQC:

1. Z-measurement errors (failed postselected gates).
   - Use Z-detecting stabilizer codes. See eLOQC IV, V.

1.a. Phase noise.
   - Use Z-detecting codes based on good classical codes and syndrome based recovery methods.

1.b. Photon loss, detector inefficiency.
   - Use loss detection and erasure codes. See eLOQC VI, VII.

2.a. Mode matching and beam-splitter angle errors.
   - Use better calibration of the classical devices.

2.b. Detector dark counts.
   - Reduce them by engineering.

3. Remaining residual errors.
   - Use generic quantum fault-tolerance methods.

Back to: Guide

Preliminary resource analysis

- Example, assuming ideal LOQC gates.
  Design:
  - Goal: $< 5\%$ Z-measurement probability.

Preliminary resource analysis

- Example, assuming ideal LOQC gates.
  Design:
  - Goal: $< 5\%$ Z-measurement probability.
  - Use Tel$_3$ so that $f_0 = .25$.
  - Two levels of concatenation: $f_2 = 0.038$.

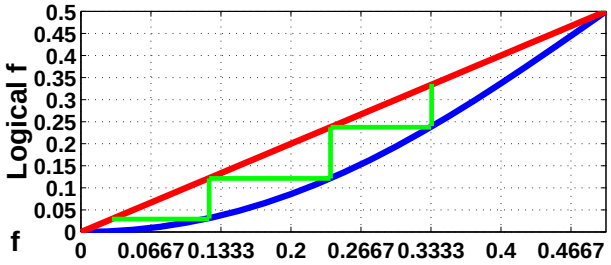

Preliminary resource analysis

- Example, assuming ideal LOQC gates.
  Design:
  - Goal: $< 5\%$ Z-measurement probability.
  - Use Tel_3 so that $f_0 = .25$.
  - Two levels of concatenation: $f_2 = 0.038$.

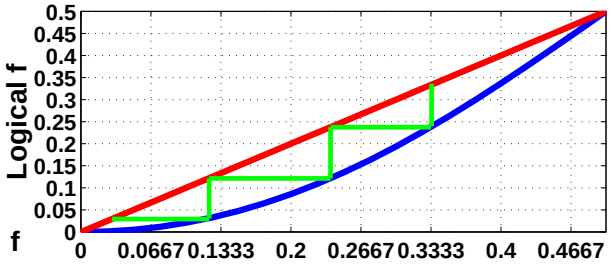

  Analysis:
  - Conditional resources:
    Encoded $(ZZ)_{90^\circ}$ depends on < 240 $\text{CS}_{9/16}$ gates.

Knill&Laflamme&Milburn 2000 [19]

Preliminary resource analysis

- Example, assuming ideal LOQC gates.
  Design:
  - Goal: $< 5\%$ Z-measurement probability.
  - Use Tel_3 so that $f_0 = .25$.
  - Two levels of concatenation: $f_2 = 0.038$.

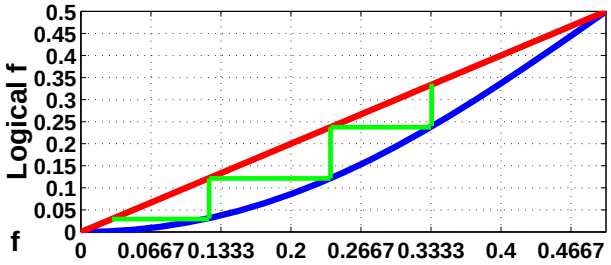

  Analysis:
  - Conditional resources: Knill&Laflamme&Milburn 2000 [19]
    Encoded $(ZZ)_{90^\circ}$ depends on < 240 $\text{CS}_{9/16}$ gates.
  - Average total resources?

Preliminary resource analysis

- Example, assuming ideal LOQC gates.
  Design:
  - Goal: $< 5\%$ Z-measurement probability.
  - Use Tel_3 so that $f_0 = .25$.
  - Two levels of concatenation: $f_2 = 0.038$.

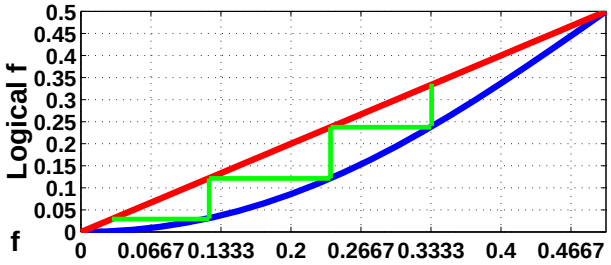

  Analysis:
  - Conditional resources: Knill&Laflamme&Milburn 2000 [19]
    Encoded $(ZZ)_{90^\circ}$ depends on < 240 $\text{CS}_{9/16}$ gates.
  - Average total resources?

- Improvements possible:
  - Use better Z-measurement codes with Tel_1.
  - Block coding.
  - Improve state preparation networks.

Back to: Guide

Technological challenges I

- Single photon sources:
  - Parametric down conversion conditional on detection of second photon (room temperature). Hong&Mandel 1986[7]
  - Acousto-electric (SAW devices, cryogenic).

    Kim&*al* 1999[20], Foden&*al* 2000[21]
  - Cycling single atoms or molecules (room temperature).

    Lounis&Moerner 2000[22]

Technological challenges I

- Single photon sources:
  - Parametric down conversion conditional on detection of second photon (room temperature). Hong&Mandel 1986[7]
  - Acousto-electric (SAW devices, cryogenic).

    Kim&*al* 1999[20], Foden&*al* 2000[21]
  - Cycling single atoms or molecules (room temperature).

    Lounis&Moerner 2000[22]
- SAW devices may have error rates $< 10^{-4}$.

  Janssen&Hartland 2000 [23]

Technological challenges II

- Photodetectors:
  - Routine efficiencies $> 70\%$ (EG&G, silicon photodiodes).
  - Research level efficiency $\approx 90\%$ (with counting). Estimated internal efficiency $94.7 \pm 5\%$ (cryogenic operation). Takeuchi&Yamamoto&Hogue 1999[24]
  - Up to 97% with trap arrangements and silicon photodiodes? Hariharan 1999[25]
  - Efficiencies above 99.9% in “absolute radiometric measurements”? Zalewski&Duda 1983[26]

Technological challenges II

- Photodetectors:
  - Routine efficiencies $> 70\%$ (EG&G, silicon photodiodes).
  - Research level efficiency $\approx 90\%$ (with counting). Estimated internal efficiency $94.7 \pm 5\%$ (cryogenic operation). Takeuchi&Yamamoto&Hogue 1999[24]
  - Up to 97% with trap arrangements and silicon photodiodes? Hariharan 1999[25]
  - Efficiencies above 99.9% in "absolute radiometric measurements"? Zalewski&Duda 1983[26]
- Photon counters:
  - In principle, with beamsplitters and photodetectors.
  - Or use "avalanche multiplication effect" for visible light photon counters. Takeuchi&Yamamoto&Hogue 1999[24]

Technological challenges III

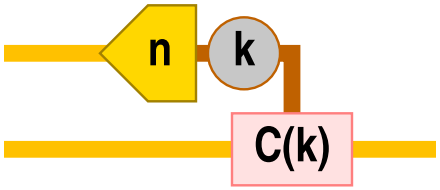

- Feedback.
  - Required to select accepted states.
  - Control mechanisms available?
  - Note: Photon speed is $\approx .3m/ns$—need for delay lines?

Technological challenges III

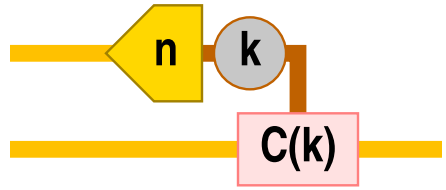

- Feedback.
  - Required to select accepted states.
  - Control mechanisms available?
  - Note: Photon speed is $\approx .3m/ns$—need for delay lines?

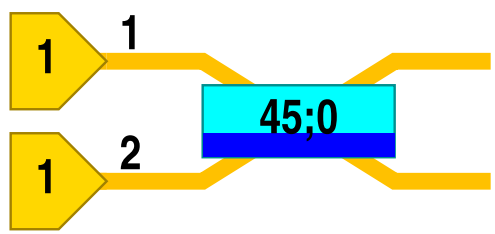

$$|02\rangle_{12} - |20\rangle_{12}$$

- Mode matching for independent photons.
  - Achievable visibilities?
  - Advantage of single (transversal) mode wave guides.
  - Lock single photon pulses with reference frequency.
  - Emission time jitter?

Back to: Guide

Contents

Title: eLOQC[a] . . . 0
Optics for Quantum Information? . . . top . . . 1
eLOQC Guide . . . top . . . 2
Optical Modes . . . top . . . 3
Optical Devices for LOQC . . . top . . . 4
On Linear Optics . . . top . . . 5
Linear Optics No-Go? . . . top . . . 6
Bosonic Qubit Operations . . . top . . . 7
Postselected Non-linear Phaseshift . . . top . . . 8
Postselected Conditional Sign Flip . . . top . . . 9
Entanglement "without" Interaction . . . top . . . 10
Trivial Teleportation . . . top . . . 11
Operation $=$ State $+$ Teleportation . . . top . . . 12
State Preparation for CS$_{1/4}$ . . . top . . . 13
Teleportation with Probability $k/(k+1)$ . . . top . . . 14
Tel$_k$: Initial State . . . top . . . 15
Tel$_k$: Adjoin Input . . . top . . . 16
Mode Fourier Transform . . . top . . . 17
Tel$_k$ State Preparation Algorithm . . . top . . . 18
Conditional Sign Flip with Probability $4/9$ . . . top . . . 19
State Preparations for CS$_{k^2/(k+1)^2}$ . . . top . . . 20
Failure Behavior of the Teleportation Schemes . . . top . . . 21
Failure Model for Ideal eLOQC Gates . . . top . . . 22
A Two-Qubit Code: X_2 . . . top . . . 23
Encoded Operations for X_2 . . . top . . . 24
Encoded Operations for X_2 . . . 25
Encoded Operations for X_2 . . . 26
Encoded Operations for X_2 . . . 27
Recovery from Z-measurement Error . . . top . . . 28
Encoded $(ZZ)_{90^\circ}$ . . . top . . . 29
Zooming in on eLOQC . . . top . . . 30
Encoded Failure Analysis . . . top . . . 31
Detecting Qubit Loss . . . top . . . 32
rTel for Loss and Leakage[a] . . . top . . . 33
Erasure Codes and Thresholds . . . 34
Priority Based Error Control . . . top . . . 35
Preliminary resource analysis . . . top . . . 36
Technological challenges I . . . top . . . 37
Technological challenges II . . . top . . . 38
Technological challenges III . . . top . . . 39
References . . . 41

References

[1] G. J. Milburn. Quantum optical Fredkin gate. *Phys. Rev. Lett.*, 62:2124–2127, 1988.

[2] Q. A. Turchette, C. J. Hood, W. Lange, H. Mabuchi, and H. J. Kimble. Measurement of conditional phase shifts for quantum logic. *Phys. Rev. Lett.*, 75:4710–4713, 1995.

[3] N. J. Cerf, C. Adami, and P. G. Kwiat. Optical simulation of quantum logic. *Phys. Rev. A*, 57:R1477–R1480, 1998.

[4] E. Knill, R. Laflamme, and G. Milburn. A scheme for efficient linear optics quantum computation. *Nature*, 409:46–52, 2001.

[5] D. Gottesman, A. Kitaev, and J. Preskill. Encoding a qudit in an oscillator. *Phys. Rev. A*, 64:012310/1–21, 2001.

[6] M. Reck, A. Zeilinger, H. J. Bernstein, and P. Bertani. Experimental realization of a discrete unitary operator. *Phys. Rev. Lett.*, 73:58–61, 1994.

[7] C. K. Hong and L. Mandel. Experimental realization of a localized one-photon state. *Phys. Rev. Lett.*, 56:58–60, 1986.

[8] L. G. Valiant. Quantum computers that can be simulated classically in polynomial time. In *Proceedings of the 33rd Annual ACM Symposium on the Theory of Computation (STOC'01)*, page ?, El Paso, Texas, 2001. ACM Press.

[9] B. M. Terhal and D. P. DiVincenzo. Classical simulation of quantum circuits using non-interacting fermions. quant-ph/0108010, 2001.

[10] E. Knill. Fermionic linear optics and matchgates. Technical Report LAUR-01-4472, Los Alamos National Laboratory, 2001. quant-ph/0108033.

[11] S. D. Bartlett, B. C. Sanders, S. L. Braunstein, and K. Nemoto. Efficient classical simulation of continuous variable quantum information processes. *Phys. Rev. Lett.*, 88:097904/1–4, 2002. quant-ph/0109047.

[12] N. Lütkenhaus, J. Calsamiglia, and K.-A. Suominen. Bell measurements for teleportation. *Phys. Rev. A*, 59:3295–3300, 1999.

[13] J. Calsamiglia. Generalized measurements by linear elements. quant-ph/0108108, 2001.

[14] T.C.Ralph, A.G.White, W.J.Munro, and G.J.Milburn. Simple scheme for efficient linear optics quantum gates. quant-ph/0108049, 2001.

[15] T. Rudolph and J.-W. Pan. A simple gate for linear optics quantum computing. quant-ph/0108056, 2001.

[16] T. B. Pittman, B. C. Jacobs, and J. D. Franson. Probabilistic quantum logic operations using polarizing beam splitters. quant-ph/0107091, 2001.

[17] D. Gottesman and I. L. Chuang. Demonstrating the viability of universal quantum computation using teleportation and single-qubit operations. *Nature*, 402:390–393, 1999.

[18] E. Knill, R. Laflamme, and G. Milburn. Efficient linear optics quantum computation. Technical Report LAUR-00-2936, Los Alamos National Laboratory, 2000. quant-ph/0006088.

[19] E. Knill, R. Laflamme, and G. Milburn. Thresholds for linear optics quantum computation. Technical Report LAUR-00-3477, Los Alamos National Laboratory, 2000. quant-ph/0006120.

[20] J. Kim, O. Benson, H. Kan, and Y. Yamamoto. A single-photon turnstile device. *Nature*, 397:500–503, 1999.

[21] C. L. Foden, V. I. Talyanskii, G. J. Milburn, M. L. Leadbeater, and M. Pepper. High frequency acousto-electric single photon source. *Phys. Rev. A*, 62:011803(R)/1–4, 2000.

[22] B. Lounis and W. E. Moerner. Single photons on demand from a single molecule at room temperature. *Nature*, 407:491–493, 2000.

[23] T. J. B. M. Janssen and A. Hartland. Accuracy of quantized single-electron current in a one-dimensional channel. *Physica B*, 284:1790–1791, 2000.

[24] S. Takeuchi, Y. Yamamoto, and H. H. Hogue. Development of a high-quantum-efficiency single-photon counting system. *App. Phys. Lett.*, 74:1063–1065, 1999.

[25] P. Hariharan. Simple, high-efficiency, single-photon trap detectors. *J. Opt. B: Quantum Semiclass. Opt.*, 1:522–523, 1999.

[26] E. F. Zalewski and C. R. Duda. Silicon photo-diode device with 100% external quantum efficiency. *Appl. Opt.*, 22:2867–2873, 1983.